UNIQUE IDENTIFICATION AUTHORITY OF INDIA
Ministry of Electronics and Information Technology, Govt. of India
Bangla Sahib Road, Behind Kali Mandir, Gole Market,
New Delhi – 110001

SUB: Corrigendum - II for "REQUEST FOR PROPOSAL FOR ESTABLISHING AND RUNNING DISTRICT LEVEL AADHAAR SEVA KENDRAS"
Publish Date: 21st March 2025, GeM Bid No. – GEM/2025/B/6078414
Ref. No. F.No. HQ-16015(26)/1/2022-EU-I-HQ

Based on the requests for clarification, extension & exemption have again been received from prospective bidders following clauses of the RFP have been amended/clarified/new clauses added:

| **Clause/ section No.** | **Existing Clause** | **Modified clause shall be read as below** |
|---|---|---|
| Table of Contents | Relaxation to be given to MSME | Relaxation to be given to Micro and Small Enterprises (MSEs) |
| 2.11 | 2.11 Relaxation to be given to MSME<br><br>2.11.1 It is informed that MSME are registered under various NIC code for Udhyam Registrars, NIC code or National Industrial Classification is a classification system used to track activities undertaken by a business. NIC code is used by majority of the Government Departments in India to classify businesses.<br><br>2.11.2 It is understood that the subject work comes under NIC code ; Division 82: Office administrative, office support, and other business support activities. Hence it is proposed that MSME relaxation on Turnover only shall be given to the entities registered under the above mentioned NIC code. However, exemption for EMD/Bid security will given to all the MSME registered under any NIC code. | 2.11 Relaxation to be given to Micro and Small Enterprises (MSEs)<br><br>2.11.1 It is informed that Micro and Small Enterprises (MSEs) are registered under various NIC code for Udhyam Registrars, NIC code or National Industrial Classification is a classification system used to track activities undertaken by a business. NIC code is used by majority of the Government Departments in India to classify businesses.<br><br>2.11.2.1 It is understood that the subject work comes under NIC code; Division 82: Office administrative, office support, and other business support activities. Hence, this limited relaxation pertaining to turnover only is available to Micro and Small Enterprises (MSEs) registered under the above-mentioned NIC code. This is in compliance with Rule 173 (i) of the GFR 2017 read with O.M No. F.20/2/2014-PPD(Pt.) dated 20.9.2016 issued by the Procurement Policy Division, Department of Expenditure, Ministry of Finance, which constitute the statutory framework within which this RFP is published.<br><br>2.11.2.2 Exemption for EMD/Bid security is available to Micro and Small Enterprises (MSEs) registered |

| | | |
|---|---|---|
| | | under any NIC code. This is in compliance with Rule 170 (i) of the GFR 2017 Ministry of Finance, Department of Expenditure which is the statutory framework within which this RFP is published.<br><br>Note: The inadvertent typographical error in the RFP clause 2.11 thus stands corrected. |
| Annexure XXVIII | (Roles and responsibility of all ASK's resource) | Modified Annexure XXVIII (Roles and responsibility of all ASK's resource) is attached below: |

# Roles and Responsibilities

**Operator/Supervisor**

- Operator/Supervisor must be aware of the latest guidelines and policies as regard to Enrolments and updates being released from time to time by UIDAI.
- Operator/Supervisor administers the enrolment process at his/her enrolment centre. He/she ensures adherence to the UIDAI enrolment processes and guidelines at the centre and good quality of data captured.
- Operator/Supervisor must ensure that the residents who have come for Aadhaar Enrolment have never enrolled for Aadhaar by using "Find Aadhaar Facility" provided in the Enrolment Client.
- Operator/Supervisor must ensure that the resident is well informed that his/her biometric will only be used for Aadhaar Enrolment/Update.
- Operator/Supervisor must ensure that the resident has filled the prescribed form for Aadhaar Enrolment/Update correctly and has brought all the Original Supporting documents for scanning.
- Operator/Supervisor must ensure that only the required items are checked in case of any update, not the complete information to avoid duplicity of data collected e.g. if Address is to be updated only the Address Check Box should be selected.
- Supervisor is required to "Sign off" every enrolment on Aadhaar client, where resident has a "biometric exception".
- Supervisor must ensure that the Operator provides his/her biometric confirmation after every Aadhaar enrolment/update.
- Operator/Supervisor must ensure that the Acknowledgement Slip is printed after every enrolment and duly signed by the resident.
- Operator/Supervisor must ensure that the original documents used as Proof of Identity/Proof of Relationship/Proof of Address/Proof of Birth and signed Acknowledgement Slip is scanned for every enrolment.
- Check devices periodically for scratches, out of focus images, only partial images getting captured. In case any such problem is noticed, it should be reported to the

Enrolment Agency Manager/HQ concerned and a change of equipment should be requested.

- Ensure all devices and computers are shut down and power is off at the end of the day to avoid accidents, ensure security arrangements for devices and other equipment.
- Specific End-of-Day Reports are available to the client, and the Operator/Supervisor can make use of these reports in managing day-to-day operations at the centre.
- Operator/Supervisor must ensure that staff at the centre observe the highest standards of ethics during the execution of Aadhaar Enrolment/Update and do not ask for any additional money.
- Operator/Supervisor is also responsible for maintaining the confidentiality and security of the data collected during Aadhaar enrolments.
- GPS synchronization must be done every day.
- The Supervisor also acts as an Operator, when required, in exigencies.

**Verifier**

- The demographic information entered from documents by the residents seeking for enrolment to be duly verified by the verifier.
- The verifier will verify the documents submitted by the resident against the enrolment form filled by the resident.
- Verifier will check the genuineness of supporting documents submitted by resident by scanning QR code or other such means.
- Verifier must verify the information mentioned in the supporting documents with the information mentioned in the Aadhaar Enrolment/Update Form. Verifier also checks that the names of the documents captured in the enrolment form are correct and same as the original documents produced by the resident.
- Verifier's responsibility to ensure that Enrolment/Update Form is filled completely and correctly as per UIDAI enrolment process. No mandatory field should be left blank, and resident should be encouraged to fill optional fields like mobile number and email address.
- Verifier will sign and write his/her name and ID on the Enrolment/Update Form after verification.
- UIDAI standard certificate issued by gazetted officer will not be signed by the verifier.

**Helpdesk**

The primary role of a helpdesk in an ASK is to act as the first point of contact for users and customers, providing technical support and resolving issues related to IT infrastructure, software, and applications. They are responsible for identifying, diagnosing, and resolving problems, often escalating complex issues to higher support levels. Helpdesk personnel also manage and track incidents and service requests, ensuring timely resolution and user satisfaction.

**Cashier (Cash Counter)**

In ASK, a cashier's role revolves around handling customer transactions, ensuring accurate accounting, and providing excellent customer service. They process payments, manage cash, and often operate point-of-sale (POS) systems. Additionally, cashiers may handle returns, exchanges, and assist with general customer inquiries

**Operations Manager**

At the Enrolment Centre, the Operations Manager's role is to plan and deploy logistics and other requirements at the enrolment centre, set up the enrolment stations at the enrolment centre as per UIDAI guidelines and overall supervise the operations at the centre.

The Operations Manager ensures the following:

**Site Readiness**

- Prepare and manage the Enrolment Centre Setup Checklist – UIDAI has provided Enrolment Centre Checklist to facilitate the Service Provider in setting up enrolment stations and centres. The Operations Manager must use this list to ensure that all requirements are met for the centre that he/she is responsible for. He/she must fill in and sign the checklist at the beginning of each enrolment centre and/or once every week (whichever is earlier). This checklist needs to be maintained for later review/audit at every enrolment centre by UIDAI.
- Operations Manager is responsible for setting up of the laptop/desktop with Aadhaar client installed and tested, attached with all devices like STQC Certified Biometric Capture Devices, GPS Device and Printer-cum-Scanners and ensure all equipment are in working condition to start Aadhaar Enrolments/Update process.
- Ensure that the latest Aadhaar Enrolment client/Update software is installed.
- Ensure that the enrolment centre premises are neat and clean, hygienic, well maintained and safe from electric/fire hazards.
- Ensure that basic enrolment centre information as given below is displayed mandatorily at each enrolment station (in local language and English):

– Name of Registrar and Contact Number

– Name of Enrolment Agency and Contact Number

– Name, Code, and contact number of EA Supervisor at enrolment centres

– Escalation Matrix for Raising Complaint against the Supervisor

– Working hours and Holidays of the Enrolment Centre

– UIDAI Help Line Number: 1947 and email id: help@uidai.gov.in

– List of Supporting Documents required for Aadhaar Enrolment/Update

– Rate List for all the Aadhaar related services

- The Operations Manager will also make sure that the Aadhaar IEC material provided by the Registrar/Authority is properly displayed at the centre, as per UIDAI guidelines.
- The Operations Manager must ensure that every operator is aware of and has a print copy of the critical points to be reviewed at the station during Resident's review of enrolment data.
- The Operations Manager must ensure that the operator diligently reviews the data captured from residents for every enrolment/update and makes corrections when pointed out by the resident.
- Ensure that the behaviour of the operator and other staff at the enrolment centre is courteous towards the residents and take charge where operator is not able to handle dissatisfied residents to prevent unpleasant situations.
- Make sure that staff wear uniform and ID cards at the enrolment centre so that if residents need help, they can easily identify employees by their attire.
- Do not undertake enrolment operations at any location without valid agreement with the Registrars/Authority.

**Project Manager**

The service provider must depute Project Manager under every Regional Office separately, Project Manager shall take charge of the performance of all ASK services. The Project Manager shall act as a single point of contact for Regional Office. Project Manager may work on hybrid mode.

**Note: Additional Laptop/Desktop will be required to be placed by the service provider for the following: Verifier, Token issuer, Cashier and Operations Manager**

Himanshu

Deputy Director

E&U Division

**Annexure-XXVIII**

**Roles and responsibility of ASK resource**

**Operator/Supervisor**

An Operator/Supervisor is employed by an Service Provider to execute enrolment at the enrolment stations. To qualify for this role, person should satisfy the following criteria:

a. The person should be of age 18 years and above.

b. The person must be a graduate.

c. The person should have been enrolled for Aadhaar and his/her Aadhaar number should have been generated.

d. The person should have a basic understanding of operating a computer and should be comfortable with local language keyboard and transliteration.

e. The person should have obtained "Operator Certificate" from a Testing and Certification Agency appointed by UIDAI.

Before starting work as an Operator:

a. The person must be engaged and activated by any Service Provider in accordance with UIDAI guidelines prior to commencing enrolments.

b. The person should have undergone Training Session conducted by Regional Offices/Service Provider on Aadhaar Enrolment/Update Processes and various equipment and devices used during Aadhaar enrolment.

c. The person should have read the complete Training Material on Aadhaar Enrolment/Update available on UIDAI website before giving the certification exam.

d. The person should be comfortable with local language keyboard and transliteration

e. Operator must submit his/her “On boarding Form” along with the required documents to the Service Provider which in turn submit the form to concerned “UIDAI Regional Offices” for verification.

f. After verification Regional Offices will approve/reject the on boarding with the respective Service Provider.

g. Service Provider will then add the Operator by taking his/her biometrics in the Aadhaar client software and provide a User Name & Password to operate the Enrolment Machine.

h. Enrolled User means that the user’s biometric details verification at UIDAI is successfully completed and stored in local database at the enrolment station.

**Verifier**

When the resident comes to enroll for Aadhaar to an Enrolment Centre, demographic information will be entered from documents that the resident provides. The authentication of documents submitted by the resident is duly verified by the officials authorized to verify the documents. Such officials are termed as verifiers. The verifier present at the Enrolment Centre will verify the documents submitted by the resident against the enrolment form filled by the resident.

The verifiers in an enrolment centre cannot be from the same vendor, hired as Service Provider. Service Provider needs to ensure that verifiers are appropriately trained before being put in the field. The Service Provider may appoint more Verifier in a centre, if and where required. The list of all Verifiers must be notified, by designation, by the Service Provider before commencement of the enrolments and the list should be shared with the Regional office concerned.

For enrolment, Resident will bring his/her Original documents/ Attested Photocopies along with filled Aadhaar Enrolment/Update Form. Verifier must verify the information mentioned in the supporting documents with the information mentioned in the Aadhaar Enrolment/Update Form. Verifier also checks that the names of the documents captured in the enrolment form are correct and same as the original documents produced by the resident.

a. Verifier needs to be available in the enrolment centre throughout the operating hours of the centre. Service Providers should ensure physical presence of verifiers during the enrolment.

b. It is verifier's responsibility to ensure that Enrolment/Update Form is filled completely and correctly as per UIDAI enrolment process. No mandatory field should be left blank and resident should be encouraged to fill optional fields like mobile number and email address.

Service Provider shall translate this document into local language

c. Verifier will sign and stamp the Enrolment/Update Form after verification. If stamp is not available, the verifier can sign and put his/her Name. The resident will then go to the Service Provider Operator for getting enrolled.

d. However, if the resident is enrolled and has come for Correction for a particular demographic field, the resident need not enter all details in the Form. The resident must provide his/her original Enrolment Number, Date and Time (together known as EID), his/her Name and the field which needs correction.

e. Verifier will only verify if it is one of the fields requiring verification of documents. Verifier will use the same UIDAI verification guidelines as used during resident enrolment.

f. Verifier's signature/thumb print and stamp/Name is required except in case where copies attested / certified by a public notary / gazetted officer are being submitted.

g. The Verifier must be physically present at the enrolment centre every day and, thus, can monitor the Enrolment Centre performance and provide immediate information to UIDAI and Service Provider on process deviations and malpractices at the enrolment centre.

**Helpdesk**

The primary role of a helpdesk in a ASK is to act as the first point of contact for users and customers, providing technical support and resolving issues related to IT infrastructure, software, and applications. They are responsible for identifying, diagnosing, and resolving problems, often escalating complex issues to higher support levels. Helpdesk personnel also manage and track incidents and service requests, ensuring timely resolution and user satisfaction.

**Cashier (Cash Counter)**

In ASK, a cashier's role revolves around handling customer transactions, ensuring accurate accounting, and providing excellent customer service. They process payments, manage cash, and often operate point-of-sale (POS) systems. Additionally, cashiers may handle returns, exchanges, and assist with general customer inquiries.

**Operation Manager**

The Service Provider shall depute one full time Operation Manager for each Aadhaar seva kendra who will take care day to day activities of centre and also provide grievance redressal to residents. Operation Manager will handle the entire grievance related to appointment booking/portal, Aadhaar enrolment/update process till the exit counter etc. which come under the domain of ASK operations.

**Project Manger**

Service provider has to depute project manager under every regional office separately, Project Manager shall take charge of the performance of all ASK Services. The Project Manager shall act as a single point of Contact for UIDAI. Project manager should be work on hybrid mode.

Note: Additional Laptop/Desktop will be required to be place by the service provider for the following: Verifier, Token issuer, cashier and Operation manager.

**Annexure XXVI**

## Form of Insurance Surety Bond towards Performance Security (To be stamped in accordance with Stamp Act of India)

Insurance Surety Bond No.:
Date:

To
**{Owner's Name and Address}**

Dear Sirs,
In consideration of the UIDAI (Hereinafter referred to as the 'Owner' which expression shall unless repugnant to the context or meaning thereof, include its successors, administrators and assigns) having awarded to M/s [Supplier's Name]..... with its Registered/Head Office at ..... (Hereinafter referred to as the 'Supplier', which expression shall unless repugnant to the context or meaning thereof, include its successors administrators, executors and assigns), a Contract by issue of Owner's Purchase Order No dated…. and the same having been unequivocally accepted by the Supplier, resulting into a Contract bearing No..... dated ....., valued at ..... for and the Supplier having agreed to provide a Contract Performance Guarantee for the faithful performance of the entire Contract equivalent to .....(*). % (percent) of the said value of the **Contract to the Owner.**

We .....[Name & Address of the Insurer] ..... having its Head Office at ..... (hereinafter referred to as the 'Insurer', which expression shall, unless repugnant to the context or meaning thereof, include its successors, administrators, executors and assigns) do hereby guarantee and undertake to pay the Owner, on demand any and all amount payable by the Supplier to the extent of .....(*)..... as aforesaid at any time up to ..... [days/month/year] without any condition, demur, reservation, contest, recourse or protest and/or without any reference to the Supplier. Any such demand made by the Owner on the Insurer shall be conclusive and binding notwithstanding any difference between the Owner and the Supplier or any dispute pending before any Court, Tribunal, Arbitrator or any other authority. The Insurer undertakes not to revoke this Insurance Surety Bond during its currency and or any period extended under the contract, without prior consent of the Owner and further agrees that the guarantee herein contained shall be enforceable till the Owner discharges this guarantee.
The Owner shall have the fullest liberty, without affecting in any way the liability of the Insurer under this Insurance Surety Bond, from time to time to extend the performance of the Contract by the Supplier for the purpose of which, the Insurer shall be liable to extend the validity of the present Insurance Surety Bond without any demur, condition, protest and the Insurer shall at no point in time have an option of revoking the same, The Owner shall have the fullest liberty, without affecting this Insurance Surety Bond, to postpone from time to time

the exercise of any powers vested in them or of any right which they might have against the Supplier, and to exercise the same at any time in any manner, and either to enforce or to forbear to enforce any covenants, contained or implied, in the Contract between the Owner and the Supplier or any other course or remedy or security available to the Owner. The Insurer shall not be released of its obligations under these presents by any exercise by the Owner of its liberty with reference to the aforesaid or any of them or by reason of any other act or forbearance or other acts of omission or commission on the part of the Owner or any other indulgence shown by the Owner or by any other matter or thing whatsoever which under law would, but for this provision, have the effect of relieving the Insurer.
The Insurer also agrees and undertakes that the Owner at its option shall be entitled to enforce this Insurance Surety Bond against the Insurer as a Surety, in the first instance without proceeding against the Supplier and notwithstanding any security or other guarantee that the Owner may have in relation to the Supplier's liabilities.

Notwithstanding anything contained hereinabove our liability under this Insurance Surety Bond is restricted to .....(*). and it shall remain in force upto and including .....(@). and shall be extended from time to time for such period (not exceeding one year), as may be desired by M/s. {Supplier's Name} on whose behalf this Insurance Surety Bond has been given. Dated this ..... day of ..... 20..... at.....

WITNESS :

1. .....

.....

(Signature) (Signature)

.....

.....

.

(Name) (Name)

.....

.....

.

(Official Address)

(Designation with
Insurer Stamp) Authorised Vide Power of Attorney
No.....
Date.....

2. .....

(Signature)

.....

(Name)

.....

(Official Address)

Notes :

1. (*) This sum shall be five percent (05%) of the Contract Price.
2. The Insurance Surety Bond shall be from an Insurer as per guidelines issued by Insurance Regulatory and Development Authority of India (IRDAI).

The Owner shall be the Creditor, the Supplier shall be the Principal debtor and the Insurance company/Insurer shall be the Surety in respect of the Insurance Surety Bond to be issued by the Insurer.

3. The Insurance Surety Bond should be on Non-Judicial stamp paper/e-stamp paper of appropriate value as per Stamp Act prevailing in the state(s) where the Insurance Surety Bond is submitted or is to be acted upon

or the rate prevailing in State where the Insurance Surety Bond is executed, whichever is higher. The Stamp Paper/e- stamp paper shall be purchased in the name of Supplier/Insurer issuing the Insurance Surety Bond.

4. While getting the Insurance Surety Bond issued, the Supplier is required to ensure compliance to the points mentioned in Form of Bank Guarantee/ Insurance Surety Bond Verification Check List. Further, the Supplier is required to fill up this Form and enclose the same with the Insurance Surety Bond.

**BANK GUARANTEE/INSURANCE SRETY BOND VERIFICATION CHECK LIST**
*(To be submitted with EMD and CPG*)

1. **Bank Guarantee/Insurance Surety Bond (ISB) No. & Date: ……..**
2. **Name of Issuing Bank/Branch/Insurance Agency :**
   …….

3. **Amount : ……..**
4. **Nature of BG/ISB & No. of Pages : ……..**

5. **Validity of BG/SIB : …….**
6. **Vendor Reference :**

Name ……..
Address ……
Telephone …….
Fax Email ……

7. **Bank / Insurance Agency Reference**

Name
…….
Address……
Telephone…….
Fax…….
Email ……

| Sl. No. | *Details of Checks* | Yes/No |
|---|---|---|
| 1. | Is the BG on Non-judicial stamp paper of appropriate value, as per Stamp Act? | |
| 2. | Whether date, purpose of purchase of stamp paper and name of the Owner indicated on the back of stamp paper under the Signature of Stamp Vendor?<br>(The date of purchase of stamp paper should be of any date on or before the date of execution of BG and the stamp paper should be purchased either in the name of the executing Bank or Insurance Agency or the Supplier on whose behalf the BG has been issued. The Stamp Papers (other than e- stamp paper) should be dulysigned by the stamp vendor). | |
| 3. | In case the BGs from abroad, has the BG been executed on Letter Head of the Bank or Insurance Agency? | |
| 4. | Has the executing officer of BG indicated his name, designation and Power of Attorney No. / Signing Power No. etc., on the BG? | |
| 5. | Is each page of BG duly signed / initialed by executant and whether stamp of Bank or Insurance Agency is affixed thereon? | |
| 6. | Whether the last page is signed with full particulars including two witnesses under seal of Bank or Insurance Agency as required in the<br>prescribed proforma? | |
| 7. | Does the Bank Guarantee compare verbatim with the Proforma prescribed in the Bidding Documents? | |
| 8. | Are the factual details such as NIT no. / Tender Enquiry no. / Bidding Documents No. / Specification No., Amount of BG, validity of BG correctly mentioned in the BG? | |
| 9. | Whether overwriting / cutting, if any on the BG have been properly authenticated under signature & seal of executants? | |
| 10. | Whether BG has been issued by a Bank o r Insurance Agency in line with the provisions ofBidding Documents? | |
| 11. | In case BG has been issued by a Bank or Insurance Agency other than those specified in BiddingDocument, is the BG confirmed by a Bank in India or Insurance Agency acceptable as per BiddingDocument? | |

**Signature of Supplier……. Name …….**
**Designation ……. Seal**

Annexure XXVII

**Form of Insurance Surety Bond towards EMD**
**(To be stamped in accordance with Stamp Act of India)**

Insurance Surety Bond No.:
Date:

To
**{Owner's Name and Address}**

Dear Sirs,

In accordance with Invitation for Bids under your Bid Document No. ***{Tender Reference No.},*** M/s ***{Supplier's Name}*** having its Registered/Head Office at ***{address}*** (hereinafter called the 'Supplier') wish to participate in the said bid for ***{Tender Title}.***

As an irrevocable Insurance Surety Bond against Bid Security for an amount of .....(*)..... valid for 45 days from .....(**) required to be submitted by the Supplier as a condition precedent for participation in the said bid which amount is liable to be forfeited on the happening of any contingencies as mentioned under the Bidding Documents.

We, the ***{Name of the Insurer}*** having our Head Office at ***{address of the Insurer}*** guarantee and undertake to pay immediately on demand by UIDAI (hereinafter called the 'Owner') the amount of .....(*)..... without any reservation, protest, demand and recourse. Any such demand made by the 'Owner' shall be conclusive and binding on us irrespective of any dispute or difference raised by the Supplier and/or any right/remedy available to the supplier in terms thereof.

This Insurance Surety Bond shall be unconditional as well as irrevocable and shall remain valid upto.....(@) If any further extension of this Insurance Surety Bond is required, the same shall be extended to such required period (not exceeding one year) on receiving instructions from M/s ***{Supplier's Name}*** on whose behalf this Insurance Surety Bond is issued.

In witness where of the Insurer, through its authorised officer, has set its hand and stamp on this ..... day of ..... 20..... at .....

.....
(Signature)

.....
(Name)

.....
(Designation with Insurer Stamp)

Authorised Vide Power of Attorney PoA No.....

Date.....

**NOTE:**

(*) The amount shall be as specified in the INR.
(**) This shall be beyond bid validity date.

1. The Insurance Surety Bond shall be from an Insurer as per guidelines issued by Insurance Regulatory and Development Authority of India (IRDAI) as amended from time to time.

2. The Owner shall be the Creditor, the Supplier shall be the Principal debtor and the Insurance company/Insurer shall be the Surety in respect of the Insurance Surety Bond to be issued by the Insurer.

3. The Insurance Surety Bond should be on Non-Judicial stamp paper/e-stamp paper of appropriate value as per Stamp Act prevailing in the state(s) where the Insurance Surety Bond is submitted or is to be acted upon or the rate prevailing in State where the Insurance Surety Bond is executed, whichever is higher. The Stamp Paper/e- stamp paper shall be purchased in the name of Supplier/Insurer issuing the Insurance Surety Bond.

4. While getting the Insurance Surety Bond issued, Suppliers are required to ensure compliance to the points mentioned in Form of Bank Guarantee/Insurance Surety Bond Verification Check List enclosed in this Section of Bidding Documents. Further, Suppliers are required to fill up this Form and enclose the same with the Insurance Surety Bond.

# F.No. HQ-16015(26)/1/2022-EU-1-HQ

UNIQUE IDENTIFICATION AUTHORITY OF INDIA
Ministry of Electronics and Information Technology, Govt. of India
Bangla Sahib Road, Behind Kali Mandir, Gole Market,
New Delhi – 110001
******

SUB: Corrigendum for "REQUEST FOR PROPOSAL FOR ESTABLISHING AND RUNNING DISTRICT LEVEL AADHAAR SEVA KENDRAS"

Publish Date: 21st March 2025, GeM Bid No. – GEM/2025/B/6078414
Ref. No. F.No. 16015(26)/1/2022-EU-I-HQ

Based on various queries raised by prospective bidders, during the pre-bid meetings and queries received in writing, following clauses of the RFP have been amended/clarified/new clauses added:

| Clause/ section No. | Existing Clause | Modified clause shall be read as below |
|---|---|---|
| | RFP Number: HO/----------<br>Dated: --/--/2025 | RFP Number: HO/16015(26)/1/2022-EU-I-HQ<br>Dated: 21/03/2025 |
| 1.2 | Fact Sheet<br>EMD /Bid Security – [INR 60 Crore – in the form of Insurance Surety Bonds, Account Payee Demand Draft, Fixed Deposit Receipt or Bank Guarantee from any of the Scheduled Commercial Banks or payment online] | Fact Sheet<br>EMD /Bid Security – [INR 60,05,93,522 – in the form of Insurance Surety Bonds, Account Payee Demand Draft, Fixed Deposit Receipt or Bank Guarantee from any of the Scheduled Commercial Banks or payment online] |
| 2.11.2 | 2.11.2 It is understood that the subject work comes under NIC code; Division 82: Office administrative, office support, and other business support activities. Hence it is proposed that MSME relaxation on Experience and Turnover only shall be given to the entities registered under the above-mentioned NIC code. However, exemption for EMD/Bid security will give to all the MSME registered under any NIC code. | 2.11.2 It is understood that the subject work comes under NIC code; Division 82: Office administrative, office support, and other business support activities. Hence it is proposed that MSME relaxation on Turnover only shall be given to the entities registered under the above-mentioned NIC code. However, exemption for EMD/Bid security will be given to all the MSME registered under any NIC code. |
| 3.2 | **Stage 1**<br>Pre-Qualification Criteria: (5. Relevant Project Experience)<br>Copy of Work Order /LOA or Signed copy of Agreement/Work Completion Certificate AND Client certificate for satisfactory performance under the respective ongoing/completed assignments/projects. | **Stage 1**<br>Pre-Qualification Criteria: (5. Relevant Project Experience)<br>Copy of Work Order /LOA or Signed copy of Agreement AND Work Completion Certificate/ Client certificate for satisfactory performance under the respective ongoing/completed assignments/projects. |
| 3.3 | **Stage 2:**<br><u>Commercial Bid</u><br><br>3.3.1.e The Bidder quoting lowest bid-amount shall be declared as lowest bid (L1) and all others also declared as L2, L3…..Ln. | **Stage 2:**<br><u>Commercial Bid</u><br><br>3.3.1.e The Bidder quoting lowest bid-amount shall be declared as lowest price.<br>3.3.1.f Reverse Auction (RA) with condition '50% Lowest Priced Technically Qualified |

| | | |
|---|---|---|
| | 3.3.1.f The lowest rate L1 bidders, received from a qualified bidder will be treated as the "Discovered Rate".<br><br>3.3.1.g On the basis of "Discovered Rate" Service Provider will be paid 125% of the Discovered Rate for each new Enrolment (above 5 years of age), Biometric Update (with or without demographic update) transaction and 75% of the Discovered Rate for each child enrolment (below 5 years), Demographic Update and Document only update transaction.<br><br>3.3.1.h The Purchaser shall have the right to reject an abnormally low Bid as per the provisions of this paragraph. An abnormally low Bid is one in which the Bid price, in combination with other elements of the Bid, appears so low that it raises substantive concerns as to the Bidder's capability to perform the Contract at the Bid price. The Purchaser may, in such cases, seek written clarifications from the Bidder, including detailed price analysis of its Bid price, concerning the scope, the schedule, allocation of risk and responsibilities, and any other requirements of the RFP. If, after evaluating the price analysis, the Purchaser determines that the Bidder has substantively failed to demonstrate its capability to perform the Contract at the Bid price, the Purchaser may reject the Bid, and evaluation may proceed with the next ranked Bidder.<br><br>3.3.1.i Work shall be distributed between 2 (two) Service Providers' for the allocation of work in the ratio of 60:40 subject to rate should be matched with L1<br><br>3.3.1.j In case of multiple L1. The GeM has a provision of random selection of L1. For deciding Second Service Provider (L2) the bidder having higher marks in technical evaluation as per clause (clause 3.2.4): Technical Qualification Criteria will be given priority.<br><br>3.3.1.k In case total marks scored are same in technical proposal then the bidder scoring higher marks in Presentation will be given priority.<br><br>3.3.1.l Once the L1 bidder is identified, the bidder at L2 will be given first rights | Bidders'<br><br>3.3.1.g The Bidder quoting lowest bid-amount shall be declared as lowest bid RA (L1).<br><br>3.3.1.h Work shall be distributed between 2 (two) Service Providers for the allocation of work in the ratio of 60:40 subject to rate should be matched with L1<br><br>3.3.1.i Once the RA L1 bidder is identified, the bidder RA L2 will be given first chance to match the RA L1 rate to receive an order for carrying out the services.<br><br>3.3.1.j In case, RA L2 is unable to match the quote by RA L1, the option shall be passed to RA L3, this process will be repeated moving from L3 to L4 and so on, till one more successful Bidder emerges, offering the service at the Discovered Rate. In case no one agrees to match the RA L1 quote, whole contract will go to RA L1 Bidder.<br><br>3.3.1.k The quoted rate of RA L1 bidder, will be treated as the "Discovered Rate".<br><br>3.3.1.l On the basis of "Discovered Rate" Service Provider will be paid 125% of the Discovered Rate for each new Enrolment (above 5 years of age), Biometric Update (with or without demographic update) transaction and 75% of the Discovered Rate for each child enrolment (below 5 years), Demographic Update and Document only update transaction.<br><br>3.3.1.m The Purchaser shall have the right to reject an abnormally low Bid as per the provisions of this paragraph. An abnormally low Bid is one in which the Bid price, in combination with other elements of the Bid, appears so low that it raises substantive concerns as to the Bidder's capability to perform the Contract at the Bid price. The Purchaser may, in such cases, seek written clarifications from the Bidder, including detailed price analysis of its Bid price, concerning the scope, the schedule, allocation of risk and responsibilities, and any other requirements of the RFP. If, after evaluating the price analysis, the Purchaser determines that the Bidder has substantively failed to demonstrate its capability to perform the Contract at the Bid price, the Purchaser may reject the Bid, and evaluation may proceed with the next ranked Bidder.<br>3.3.1.n Deleted |

| | | |
|---|---|---|
| | to match the L1 rate to receive an order for carrying out the services.<br><br>3.3.1.m In case, L2 is unable to match the quote by L1, the option shall be passed to L3, this process will be repeated moving from L3 to L4 and so on, till one more successful Bidder emerges, offering the service at the Discovered Rate. In case no one agrees to match the L1 quote, whole contract will go to L1 Bidder.<br><br>3.3.1.n Reverse Auction with condition '50% Lowest Priced Technically Qualified Bidders' | |
| 4.2.2 | The estimated volume of work to be done is indicated in this section, however, UIDAI may conduct a periodic review of the requirement of the project and shall have the liberty to enhance or reduce the volume of work. Subsequently, Service provider on prior approval of UIDAI may increase/ decrease up to +/-25% kits depending upon requirement. The number of operators will increase/decrease accordingly but remain the same on the existing terms of contract. UIDAI can also allow for 25% of kits as CLEC/UCL as per the requirement. The core operations of the established ASK should be completely monitored by the UIDAI appointed as ASK Manager. | The estimated volume of work to be done is indicated in this section, however, UIDAI may conduct a periodic review of the requirement of the project and shall have the liberty to enhance or reduce the volume of work. Subsequently, Service provider on prior approval of UIDAI may increase/ decrease up to +/-25% kits depending upon requirement. The number of operators will increase/decrease accordingly but remain the same on the existing terms of contract. UIDAI can also allow for 25% of kits as CELC/UCL as per the requirement. The core operations of the established ASK should be completely monitored by the UIDAI appointed as ASK Manager. |
| 4.3.2 | For establishment of ASK, Service Provider to identify a location in the allocated districts and submit to concerned Regional Office for approval. Locations should have proper ventilation and GPS coordinates should be captured at any place inside it. Approval in this regard will be provided by the concerned Regional Office/ UIDAI Head Office in identification/finalization of the same as per plan mentioned clause 4.13.9 in this RFP. | For establishment of ASK, Service Provider to identify a location in the allocated districts and submit to concerned Regional Office for approval. Locations should have proper ventilation and GPS coordinates should be captured at any place inside it. Approval in this regard will be provided by the concerned Regional Office/ UIDAI Head Office. |
| 4.3.17.f | All ASK should be equipped with CCTV cameras. The Service Provider will establish a central monitoring system accessible via internet for the live monitoring of the ASK. Access to this system should be made available to concerned Regional Office. The recordings of the CCTV shall be stored with the Service Provider for a minimum period of 6 months and to be produce on demand. | All ASKs should be equipped with CCTV cameras. The Service Provider will locally establish monitoring systems that should be accessible to UIDAI via internet for remote monitoring of the ASKs. The recordings of the CCTV shall be stored with the Service Provider for a minimum period of 6 months and to be produce on demand. |
| 4.3.19 | A lactation room (or lactorium), a private space of 40 sqft, where mother can breastfeed to infants. | shall be treated as deleted |
| 4.4.8 | On direction of UIDAI, the service | On direction of UIDAI, the service provider |

| | | |
|---|---|---|
| | provider shall also organize the camps and home enrolment provision from time to time with arrangement of manpower, AEKs and other necessary IT equipment's. Service Provider shall be allowed to have additional KITs for the purpose of conducting camps. However, prior approval of regional office shall be taken for conducting camps. | shall organize camps and home enrolment from time to time with arrangement of manpower, AEKs and other necessary IT equipment's. Service Provider may keep additional KITs for the purpose of conducting camps. However, prior approval of regional office shall be taken for conducting camps.<br>Home enrolment shall be carried out as the UIDAI policy (https://uidai.gov.in/en/circulars-memorandums-notification/18421-home-enrolment-policy.html) which may be updated time to time. |
| 4.9.8 | After completion of enrolment / update resident shall move to exit counter for token submission and filling feedback form. | After completion of enrolment / update resident shall move to exit counter for token submission and filling touch screen-based feedback. |
| 6.6.1 | For proper monitoring and imposing financial disincentive on Registrars and disassociation/suspension of operators found conducting more mistakes/involved in fraudulent practices, a mechanism is applicable through "Policy for enforcing of Aadhaar (Enrolment and Update) Regulations 2016, processes, standards, guidelines, Data Quality and containing corrupt / fraudulent practices" revised from time to time. The penalties and the actions proposed shall be applicable for ASKs as well. The applicable policy is available at https://uidai.gov.in//images/resource/Policy-for-enforcing-process-guidelines-dated-24-03-2021.pdf | For proper monitoring and imposing financial disincentive on Registrars and disassociation/suspension of operators found conducting more mistakes/involved in fraudulent practices, a mechanism is applicable through "Policy for enforcing of Aadhaar (Enrolment and Update) Regulations 2016, processes, standards, guidelines, Data Quality and containing corrupt / fraudulent practices" revised from time to time. The penalties and the actions proposed shall be applicable for ASKs as well. The applicable policy is available at https://uidai.gov.in/images/policy_version_50.pdf (updated from time to time). |
| 4.7.1 | The Service Provider shall employ manpower on monthly salary basis and provide such qualified and experienced personnel as required to carry out the Services at ASK. | The Service Provider shall employ manpower on monthly salary basis and provide such qualified and experienced personnel as required to carry out the Services at ASK. Salaries paid must conform to the legal provisions applicable to that respective state (Minimum Wages Act, 1948 and respective Minimum Wages Rules of States, as applicable). |
| 8.8 | ANNEXURE-VIII: Cost calculation Scenarios in case of shortfall in Aadhaar transaction | Shall be treated as Deleted |
| | Additional | Annexure XXVI Form of Insurance Surety Bond towards Performance Security, attached below: |
| 4.7.3 | Additional | Roles and responsibility of all ASK's resource are attached at Annexure XXVIII below: |
| | Additional | Annexure XXVII Form of Insurance Surety Bond towards EMD, attached below |
| 5.17.7 | Termination of Contract for failure to become effective: | Shall be treated as Deleted |

| | | |
|---|---|---|
| | If the selected Service Provider is unable to commence/complete the service within the specified period, as per the scope of work of RFP, UIDAI may declare this Contract null and void and in the event of such a declaration, the Performance Bank Guarantee is liable to be forfeited by UIDAI.<br><br>Notwithstanding the duration of the Contract stated in GCC, UIDAI, without prejudice or liability, reserves the right to terminate the Contract.<br><br>In case of termination of Contract, the Authority shall have right to decide the applicable cost and transfer to any other service provider participated in the tender/run such centers<br><br>The decision of Authority shall be final in case of transfer of assets to the Purchaser, other Service Provider or not to accept the offer. | |
| 5.17.1 | Additional | If the selected Service Provider is unable to commence/complete the service within the specified period, as per the scope of work of RFP, UIDAI may declare this Contract null and void and in the event of such a declaration, the Performance Bank Guarantee is liable to be forfeited by UIDAI.<br><br>Notwithstanding the duration of the Contract stated in GCC, UIDAI, without prejudice or liability, reserves the right to terminate the Contract. |

This issued with the approval of competent authority.

Himanshu
Deputy Director

Signed by Himanshu
Date: 08-05-2025 09:50:47

# UNIQUE IDENTIFICATION AUTHORITY OF INDIA (UIDAI) NEW DELHI

# GOVERNMENT OF INDIA

## Request for Proposal (RFP)

## For

## Engagement of Service Provider FOR

## "ESTABLISHING AND RUNNING DISTRICT LEVEL AADHAAR SEVA KENDRA"

RFP Number: HO/----------

Dated: --/--/2025

Bangla Sahib Road, Behind Kali Mandir,

Gole Market,

New Delhi – 110001

# Disclaimer

The information contained in this Request for Proposal (RFP) document is being provided to potential Bidders on the terms and conditions set out in this Tender. The purpose of this Tender Document (hereinafter called RFP or Request for Proposal) is to provide interested parties with information that may be useful to them in making their pre-qualification, Technical and financial offers pursuant to this RFP.

This RFP includes statements, which reflect various assumptions and assessments arrived at by UIDAI in relation to the Project. Such assumptions, assessments and statements do not purport to contain all the information that each Bidder may require. This RFP may not be appropriate for all persons, and it is not possible for UIDAI, its employees or advisors to consider the investment objectives, financial situation and particular needs of each party who reads or uses this RFP. The assumptions, assessments, statements, and information contained in the RFP may not be complete, accurate, adequate, or correct. Each Bidder should, therefore, conduct its own investigations and analysis and should check the accuracy, adequacy, correctness, reliability and completeness of the assumptions, assessments, statements, and information contained in this RFP and obtains independent advice from appropriate sources.

Information provided in this RFP to the Bidders is on a wide range of matters, some of which may depend upon the interpretation of law. The information given is not intended to be an exhaustive account of statutory requirements and should not be regarded as a complete or authoritative statement of law. UIDAI accepts no responsibility for the accuracy or otherwise of any interpretation or opinion on law expressed herein. UIDAI, its employees and advisors, make no representation or warranty and shall have no liability to any person, including any Bidder under any law, statute, rules or regulations or tort, principles of restitution for unjust enrichment or otherwise for any loss, damages, costs or expenses which may arise from or be incurred or suffered on account of anything contained in this RFP or otherwise, including the accuracy, adequacy, correctness, completeness or reliability of the RFP and any assessment, assumption, statement or information contained therein or deemed to form part of this RFP Document or arising in any way for participation in this Bid Process. UIDAI also accepts 'no liability' of any nature, whether resulting from negligence or otherwise whatsoever caused, arising from the reliance of any Bidder upon the statements contained in this RFP.

UIDAI may, at its absolute discretion, but without being under any obligation to do so, update, amend or supplement the information, assessment or assumptions contained in this RFP. The issue of this RFP does not imply that UIDAI is bound to select or appoint a Bidder for the Project and UIDAI reserves the right to reject all or any of the Bidder or Bids without assigning any reason whatsoever.

The Contract signed with the selected Bidders shall be governed by the provisions of the Aadhaar Act, 2016 and Regulations framed there under, including any direction issued by UIDAI under section 23- A of the Aadhaar Act, 2016 and any statutory amendment / modification therein and other applicable laws.

The Bidders shall bear all costs associated with or relating to the preparation and submission of its bid including but not limited to preparation, copying, postage, delivery fees, expenses associated with any demonstrations or presentations which may be required by UIDAI, or any other costs incurred in connection with or relating to its bid. All such costs and expenses will remain with the Bidder and UIDAI shall not be liable in any manner whatsoever for the same or for any other costs or other expenses incurred by a Bidder in preparation for submission of the bid, regardless of the conduct or outcome of the bidding process.

This RFP is not an Agreement by the Purchaser to the Bidders or any other person. The purpose of this RFP is to provide interested parties with information that may be useful to them in the formulation of their proposals. The information is not an exhaustive account of statutory requirements and should not be regarded as a complete or authoritative statement of law.

While reasonable care has been taken in providing information in this RFP, the Bidders are advised not to rely completely on this information only but also carry out their independent due diligence and risk assessments before submitting their response to this RFP. Further, the Bidders are advised to conduct their own analysis of the information contained in this RFP, carry out their own investigations about the project, the regulatory regime which applies thereto and all matters pertaining to the Purchaser and to seek their own professional advice on the legal, financial and regulatory consequences of entering into an agreement or arrangement relating to this RFP.

The information contained in this RFP is subject to update, expansion, revision and amendment prior to the last day of submission of the bid proposals at the sole discretion of the Purchaser. In case any major revisions to this RFP are made by the Purchaser before the last date of submission of the bid proposals, the Purchaser may, at its discretion, provide reasonable additional time to the Bidders to respond to this RFP. Neither the Purchaser nor any of its officers, employees nor any advisors undertake to provide any Bidder with access to any additional information or to update the information in this RFP.

# DEFINITIONS

i. "ABIS" means Automated Biometric Identification System.

ii. "Aadhaar Act, 2016" means the Aadhaar (Targeted Delivery of Financial and Other Subsidies, Benefits and Services) Act, 2016 and its regulations.

iii. "Aadhaar Number holder" means an individual who has been issued with an Aadhaar Number under Aadhaar Act 2016.

iv. "Applicable Law" means the laws and any other instruments having the force of law in India.

v. "ASK" means Aadhaar Seva Kendra.

vi. "Aadhaar Centre" is also meant as Aadhaar Seva Kendra.

vii. "ASK Service Provider" means the successful Bidder(s) who has/have to provide Services to UIDAI under the scope of this RFP/ Contract. This definition shall also include any and/or all the employees of the successful Bidder, their authorized agents, representatives and approved sub-contractors or engaged either directly or indirectly by the ASK for the purposes of the Contract.

viii. "Bidder" means the entity bidding for the Services under the RFP.

ix. "CELC" means the Child Enrolment Lite Client function for enrolment of Child below 5 years of age.

x. "Contract/ Master Service Agreement" means the Agreement entered into between the Authority and the Service Providers, together with the contract documents referred to there in, including all the attachments, appendices, annexure, and all documents incorporated by reference therein.

xi. "Contract Price" means the price to be paid for the performance of the Services, subject to such additions and adjustments thereto or deductions there from, as may be made pursuant to the Contract.

xii. "Confidential Information" means any information disclosed to or by any Party to the Contract and includes any information in relation to the Parties, a third party including any such information that may come to the knowledge of the Parties hereto/Bidder's team by virtue of this Contract that: is by its nature confidential or by the circumstances in which it is disclosed confidential and/or is designated by the disclosing Party as confidential or identified in terms connoting its confidentiality; but does not include information which is or becomes public knowledge other than by a breach of this Contract.

xiii. "Counter" means Enrolment/Verifier/Token collection/other Counter a cubical surface where transactions are conducted or work is conducted.

xiv. "ECMP" means the Enrolment Client Multiple Platform function for Aadhaar Enrolment/Update for all age group.

xv. "Effective Date" means the date on which this Contract comes into force and effect.

xvi. "Enrolling Agency" means an agency appointed by the Authority or a Registrar, as the case may be, for collecting demographic and biometric information of individuals under the Aadhaar Act, 2016.

xvii. "Government" means the Government of India.

xviii. "In writing" means communication in written form with proof of receipt.

xix. "Instructions to Bidders" (Section II of the RFP) means the document which provides interested Bidders with all information needed to prepare their bids. This document also details out the eligibility criteria and process for the selection of the Service Provider

xx. "KIT" means Aadhaar Enrolment kit consists of a set of hardware devices required to carry out successful Aadhaar enrolments & update.

xxi. "Operator" means the certified personnel employed by enrolling agencies to execute/manage the process of enrolment at the enrolment centers.

xxii. "Party" means the Purchaser or the Service Provider, as the case may be, and "Parties" means both of them.

xxiii. "Personnel" means persons hired by the Bidder and assigned to the performance of the Services or any part thereof.

xxiv. "Purchaser" means the Unique Identification Authority of India or UIDAI.

xxv. "Registrar" means any entity authorized or recognized by the Authority for the purpose of enrolling individuals under the Aadhaar Act, 2016.

xxvi. "Resident" means an individual eligible for Aadhaar number as per the Aadhaar Act, 2016.

xxvii. "RO" means Regional Office of Unique Identification Authority of India.

xxviii. "Scope of Work" or "SoW" means the Section-IV of the RFP, which explains the objectives, scope of work, activities, tasks to be performed, respective responsibilities of the Authority and the Service Provider.

xxix. "Second Service Provider" means the Bidder who chooses to match the 'Discovered Rate 'as per the process 'Selection Process' and declared as such by UIDAI.

xxx. "Service Provider/Agency" means any private or public entity that will provide the Services to the Authority under the Contract. The Service Provider is the entity, whose bid to perform the Contract has been accepted by the Authority and is named as such in the Agreement.

xxxi. "Services" means the work to be performed by the Service Provider pursuant to this Contract, as described in Scope of Work at Section IV of RFP.

xxxii. "Site" means the facilities approved by UIDAI for the RFP purpose of the Contract, wherein the operations/services as specified in the 'Scope of Work' are to be provided/carried out.

xxxiii. "SLA" refers to Service Level Agreement as defined under the Section-VI: Liquidity Damage, SLA and Payments terms in the RFP.

xxxiv. "SRC" means Standard Reconciliation Committee (SRC) is formed to review and imposition of financial disincentives regarding corruption cases on Registrars.

xxxv. "Supervisor" means the certified personnel employed by enrolling agencies to supervise/manage the process of enrolment at the enrolment centers.

xxxvi. "UC" means Universal Client function as Online platform for Aadhaar Enrolment/Update for all age group.

xxxvii. "UIDAI or Authority" means Unique Identification Authority of India.

xxxviii. "Workstation" means an area with Aadhaar enrolment 'KIT' to perform Aadhaar enrolment/update task by a single individual.

## Abbreviations

| | |
|---|---|
| **ASK** | Aadhaar Seva Kendra |
| **AEK** | Aadhaar Enrolment Kit |
| **CA** | Chartered Accountant |
| **CIDR** | Central Identities Data Repository |
| **TEC** | Tender Evaluation Committee |
| **EMD** | Earnest Money Deposit |
| **GCC** | General Conditions of Contract |
| **INR** | Indian Rupee |
| **IST** | Indian Standard Time |
| **IT** | Information Technology |
| **IP** | Integrity Pact |
| **MeitY** | Ministry of Electronics and Information Technology |
| **NDA** | Non-Disclosure Agreement |
| **GeM** | Government e-Marketplace |
| **LOA** | Letter of Acceptance |
| **PSU** | Public Sector Undertaking |
| **SLA** | Service Level Agreement |
| **HR** | Human Resources |
| **AMS** | Appointment Management System |
| **TMS** | Token Management System |
| **PBG** | Performance Bank Guarantee |
| **IPR** | Intellectual Property Right |
| **KPO** | Knowledge Process Outsourcing |
| **BPO** | Business Process Outsourcing |
| **L1** | Lowest Bid |

| | |
|---|---|
| **ECMP** | Enrolment Client Multiple Platform |
| **CELC** | Child Enrolment Lite Client |
| **UC** | Universal Client |
| **PQ** | Pre-Qualification |
| **LCS** | Least Cost Selection |
| **RFP** | Request For Proposal |
| **GST** | Goods and Service Tax |
| **TS** | Technical Score |
| **SRC** | Standard Reconcilation Committee |
| **UIDAI** | Unique Identification Authority of India |
| **DIPP** | Department of  Policy and Promotion |

# Table of Contents

**DEFINITIONS** ..... **4**

**1. SECTION 1 – INVITATION TO BID** ..... **12**

1.1 NOTICE INVITING TENDER ..... 12
1.2 FACT SHEET ..... 13
1.3 IMPORTANT TIMELINES ..... 14
1.4 INTRODUCTION AND BACKGROUND OF UIDAI ..... 15

**2 SECTION 2 – INSTRUCTIONS TO BIDDERS** ..... **18**

2.1 ONLINE BID SUBMISSION ..... 18
2.2 COMPLIANT PROPOSALS / COMPLETENESS OF RESPONSE ..... 19
2.3 PRE-BID MEETING & CLARIFICATIONS ..... 19
2.4 RESPONSES TO PRE-BID QUERIES ..... 20
2.5 LANGUAGE ..... 20
2.6 LATE BIDS ..... 20
2.7 BID VALIDITY ..... 20
2.8 AUTHORIZED SIGNATORY AND AUTHENTICATION OF BIDS ..... 20
2.9 DISQUALIFICATION ..... 21
2.10 AUTHORITY'S RIGHT TO ACCEPT/REJECT ANY OR ALL PROPOSALS ..... 22
2.11 RELAXATION TO BE GIVEN TO MSME ..... 22
2.12 CONSORTIUMS /SUB-CONTRACT ..... 23
2.13 EVALUATION OF BIDS BY UIDAI ..... 23
2.14 CRITERIA FOR EVALUATION OF BIDS ..... 23
2.15 LETTER OF ACCEPTANCE (LOA) ..... 24
2.16 SIGNING OF CONTRACT ..... 25
2.17 EARNEST MONEY DEPOSIT (EMD) ..... 25
2.18 PERFORMANCE BANK GUARANTEE (PBG) ..... 26

**3 SECTION 3 – BID CRITERIA AND EVALUATION** ..... **27**

3.1 BID EVALUATION PROCESS ..... 27
3.2 STAGE 1 ..... 27
3.3 STAGE 2: ..... 31
3.4 CRITERIA FOR ALLOCATION OF WORK ..... 34
3.5 DISCUSSION WITH SELECTED BIDDER AND FINALIZATION OF CONTRACT ..... 36
3.6 LETTER OF ACCEPTANCE (LOA) ..... 36
3.7 SIGNING OF THE CONTRACT ..... 38

**4 SECTION 4 – SCOPE OF WORK** ..... **38**

4.1 BACKGROUND OF THE PROJECT ..... 38
4.2 DETAILED SCOPE OF WORK ..... 39
4.3 ESTABLISHMENT OF AADHAAR SEVA KENDRA (ASK) ..... 39
4.4 HELPDESK SERVICE / FACILITIES MANAGEMENT ..... 43

4.5 MAINTENANCE OF ASK ..... 43
4.6 ASK OPERATIONAL SCHEDULE ..... 44
4.7 MANPOWER DEPLOYMENT AT EACH ASK ..... 44
4.8 COMPLIANCE WITH LABOUR LAWS ..... 47
4.9 RESIDENT ENROLMENT / UPDATE PROCESS ..... 48
4.10 IT INFRASTRUCTURE ..... 49
4.11 APPOINTMENT MECHANISM (ONLINE /OFFLINE) ..... 49
4.12 INFORMATION /DATA SECURITY ..... 50
4.13 INSURANCE ..... 50

**5 SECTION 5 – GENERAL CONDITIONS OF THE CONTRACT (GCC) ..... 52**

5.1 RELATIONSHIP BETWEEN THE PARTIES ..... 52
5.2 LAW GOVERNING CONTRACT ..... 52
5.3 NOTICES ..... 52
5.4 LOCATION ..... 52
5.5 AUTHORIZED REPRESENTATIVES ..... 52
5.6 FRAUD AND CORRUPTION ..... 52
5.7 TAXES AND DUTIES ..... 55
5.8 ENTIRE AGREEMENT ..... 55
5.9 MODIFICATIONS OR VARIATIONS ..... 55
5.10 FORCE MAJEURE ..... 56
5.11 NO BREACH OF CONTRACT ..... 56
5.12 CONTRACT PERIOD ..... 57
5.13 SUSPENSION ..... 58
5.14 EFFECTIVENESS OF CONTRACT ..... 58
5.15 COMMENCEMENT OF SERVICES ..... 58
5.16 EXPIRATION OF CONTRACT ..... 58
5.17 TERMINATION ..... 59
5.18 OBLIGATIONS OF THE SERVICE PROVIDER ..... 63
5.19 INTELLECTUAL PROPERTY RIGHT (IPR) ..... 66
5.20 INTEGRITY PACT (IP) ..... 67
5.21 NON-DISCLOSURE AGREEMENT (NDA) ..... 67
5.22 PAYMENT ..... 67
5.23 CURRENCY OF PAYMENT ..... 67
5.24 GOOD FAITH ..... 67
5.25 ARBITRATION AND DISPUTE SETTLEMENT ..... 68
5.26 ADHERENCE TO RULES AND REGULATIONS ..... 69
5.27 LIMITATION OF LIABILITY ..... 70
5.28 MISCELLANEOUS PROVISIONS ..... 71

**6 SECTION 6 – LIQUIDITY DAMAGE, SLA AND PAYMENTS TERMS ..... 72**

6.1 LIQUIDITY DAMAGE ..... 72
6.2 SLA FOR ESTABLISHMENT OF AADHAAR SEVA KENDRA ..... 73
6.3 SLA FOR OPERATIONS AT AADHAAR SEVA KENDRA ..... 75
6.4 NON AVAILABILITY OF MANPOWER ..... 75
6.5 NON-WORKING / AVAILABILITY OF THE AMENITIES: ** ..... 76

6.6 OPERATIONAL DIS-INCENTIVES ..... 78
6.7 PAYMENTS TO SERVICE PROVIDERS ..... 78
6.8 TERMS OF PAYMENT ..... 79
6.9 GENERAL TERMS AND CONDITIONS OF PAYMENT SCHEDULE ..... 80

**7 SECTION 7 CHANGE REQUEST AND EXIT MANAGEMENT PLAN ..... 81**

7.1 CHANGE REQUEST ..... 81
7.2 EXIT MANAGEMENT PLAN ..... 83

**8 SECTION 8 – ANNEXURE ..... 87**

**8.1 ANNEXURE-I: PRE-QUALIFICATION PROPOSAL SUBMISSION FORM** ..... 87
8.2 ANNEXURE-II: PRE QUALIFICATION- BIDDER'S INFORMATION ..... 89
8.3 ANNEXURE-III: PRE QUALIFICATION- EMD / BID SECURITY DECLARATION FORM ..... 90
8.4 ANNEXURE-IV: PRE-QUALIFICATION- MANPOWER STRENGTH ..... 91
8.5 ANNEXURE-V: PRE-QUALIFICATION- SELF DECLARATION FOR NON-BLACK LISTING ..... 92
8.6 ANNEXURE-VI: PRE-QUALIFICATION- INTEGRITY PACT (IP) ..... 93
8.7 ANNEXURE-VII: PROJECT DESCRIPTION FORM ..... 97
8.8 ANNEXURE-VIII: COST CALCULATION SCENARIOS IN CASE OF SHORTFALL IN AADHAAR TRANSACTION ..... 98
8.9 ANNEXURE-IX: PRE QUALIFICATION- POWER OF ATTORNEY ..... 99
8.10 ANNEXURE-X: PRE QUALIFICATION- DOCUMENT CHECKLIST ..... 100
8.11 ANNEXURE-XI: FORMAT FOR EMD BANK GUARANTEE ..... 101
8.12 ANNEXURE-XII: FORMAT FOR PERFORMANCE BANK GUARANTEE ..... 102
8.13 ANNEXURE-XIII: UIDAI INFORMATION SECURITY GUIDELINES ..... 104
8.14 ANNEXURE-XIV: SEATING LAYOUT- MODEL (A, B & C) ..... 113
8.15 ANNEXURE-XV: PROCESS FLOW DIAGRAM ..... 116
8.16 ANNEXURE-XVI: NON-DISCLOSURE AGREEMENT ..... 117
8.17 ANNEXURE- XVII: COMMERCIAL BID FORMAT ..... 121
8.18 ANNEXURE-XVIII: ROLES AND RESPONSIBILITY OF ASK MANAGER ..... 122
8.19 ANNEXURE XIX FORMAT FOR CHANGE CONTROL NOTE ..... 123
8.20 ANNEXURE XX UNDERTAKING ON EXIT MANAGEMENT AND TRANSITION ..... 124
8.21 ANNEXURE-XXI: LIST OF DELIVERABLES ..... 125
8.22 ANNEXURE-XXII: LIST OF EXISTING ASKS ..... 126
8.23 ANNEXURE-XXIII: LIST OF PROPOSED ASKS ..... 127
8.24 ANNEXURE-XXIV AADHAAR ENROLMENT KIT SPECIFICATIONS ECMP AND CELC ..... 139
8.25 ANNEXURE-XXV - MASTER SERVICE AGREEMENT ..... 154

# 1. Section 1 – Invitation to Bid

## 1.1 Notice Inviting Tender

UIDAI invites online bids through GeM portal ( https://www.gem.gov.in ) from eligible and prospective Bidders for engagement of Service Provider for *"**ESTABLISHING AND RUNNING DISTRICT LEVEL AADHAAR SEVA KENDRA**"* for a period of 6 (six) years.

Interested Bidders are advised to study this RFP carefully before submitting their proposals in response to the RFP. Submission of a proposal in response to this RFP shall be deemed to have been done after careful study and examination of this document with full understanding of its terms, conditions, and implications.

Interested Bidders may download the RFP from GeM Portal https://www.gem.gov.in and UIDAI Website https://www.uidai.gov.in Any subsequent corrigendum/clarifications shall also be made available on both of the above URLs.

Bid proposals shall be submitted online through normal bidding on GeM Portal. Bidders are advised to follow the instructions provided in the 'Instructions to the Bidders' for e-submission of the normal bidding on the GeM Portal. Bid proposals may be scanned with 150 dpi with black & white option which helps in reducing size of the scanned document.

This "Invitation for online Bid Proposals" is non-transferable under any circumstances

Bid shall be submitted online only at GeM portal:https://www.gem.gov.in. Bidders are advised to follow the instructions provided in the 'Instructions to the Bidders for the e-submission of the bids online through the GeM for e-Procurement at https://www.gem.gov.in

Not more than one bid shall be submitted by any Bidder. Under no circumstance will father and his son(s) or any other close relations who have business relationship with one another (i.e. where one or more partner(s)/director(s) are common), be allowed to bid for the same contract as separate competitors. A breach of this condition will render the bids of both parties liable for rejection.

Bidder who has downloaded the RFP from UIDAI website https://uidai.gov.in/uid-tenders.html or GeM website https://www.gem.gov.in shall not tamper/modify the RFP form including downloaded price bid template in any manner. In case if the same is found to be tampered /modified in any manner, bid will be completely rejected and EMD would be forfeited and Bidder is liable to be banned from doing business with UIDAI.

Pre- Bid Meeting: Pre-bid meetings or Open Forum shall be held at UNIQUE IDENTIFICATION AUTHORITY OF INDIA (UIDAI) Bangla Sahib Road, Behind Kali Mandir, Gole Market New Delhi or Online. All prospective Bidders are requested to send their queries or suggestions relating to the RFP by email to dd.eu1-hq@uidai.net.in

At any time prior to the last date for receipt of bids, UIDAI may, for any reason, whether at its own initiative or in response to a clarification requested by a prospective Bidder, modify the RFP Document by a corrigendum. Sufficient extension to the last date will be provided in such cases. Bidders are advised to visit again UIDAI website https://uidai.gov.in/uid-tenders.html and GeM website https://www.gem.gov.in at least 2 days prior to closing date of submission of RFP for any corrigendum / addendum/ amendment.

UIDAI reserves the right to reject any or all the Bids in whole or part, prior to signing of the Contract, without assigning any reasons.

## 1.2 Fact Sheet

| # | Key Information | Details |
|---|---|---|
| 1 | Scope of work | Engagement of Service Providers to establish and run the DISTRICT LEVEL AADHAAR SEVA KENDRAS (ASK) in the districts as attached in *anexxure-XXII1*and provide appointment/walkin based Aadhaar Enrolment, Update and other miscellaneous Aadhaar Services at ASK. Detailed Scope of Work and services expected from the Service Provider, are mentioned in the clause 4.2 of this RFP document. |
| | Period of Contract | 6 (Six) Years |
| 2 | Address of purchaser | UNIQUE IDENTIFICATION AUTHORITY OF INDIA (UIDAI) Bangla Sahib Road, Behind Kali Mandir, Gole Market New Delhi-110001 |
| 3 | Locations covered | 471 |
| 4 | Date of Publish | T |
| 5 | Last Date of submitting Pre-bid Queries | T+15 |
| 6 | Pre-Bid meeting | T+21 |
| 7 | Issue of Clarification/Corrigendum | T1 |
| 8 | Bid submission start date | T1+1 |
| 9 | Bid submission last date | T1+15 |
| 10 | Technical Bid Evaluation Date | Will be announced later |
| 12 | Commercial Bid Evaluation | To be intimated to shortlisted Bidder |

| | | |
|---|---|---|
| | Date | |
| 13 | Mode of Bid submission | Online through GeM portal https://www.gem.gov.in |
| 14 | Bid selection method | (LCS) Least Cost selection method |
| 15 | Validity of Bid | 180 days from last date of bid submission |
| 16 | Consortium | Not allowed |
| 17 | Tender Fees | NIL |
| 18 | EMD /Bid Security | **INR 60 Crore**–in the form of Insurance Surety Bonds, Account Payee Demand Draft, Fixed Deposit Receipt or Bank Guarantee from any of the Scheduled Commercial Banks or payment online |
| 19 | EMD/Bid Security Validity | The EMD/Bid Security is normally to remain valid for a period of 45(forty-five) days beyond the final bid validity period. |
| 20 | Language of Bid Submission | English |
| 21 | Currency | Currency in which the Bidders shall quote the price and will receive the payment is INR (Indian Rupee) only. |
| 22 | Name of the Contact Person for any clarification | Deputy Director (Enrolment & Updation-I), dd.eu1-hq@uidai.net.in |

## 1.3 Important Timelines

| S.No | Activity | Estimated Timelines |
|---|---|---|
| 1 | Submission of EMD Hard Copy | Scanned Copy of EMD must be submitted with the bid on GeM portal. Hard copy must be submitted within 5 working days of bid submission end date to the Deputy Director, E&U – 1 Division, |
| 2 | Acceptance of LOA by bidder | Within 5 days of receipt of LOA from Purchaser |
| 3 | Submission of PBG | Within 15 days of receipt of LOA |
| 4 | Signing of Contract by Bidder | Within 5 days of submitting of PBG by successful bidder. |

## 1.4 Introduction and Background of UIDAI

1.4.1 The Unique Identification Authority of India (UIDAI) is a statutory authority, which was established under the provisions of the Aadhaar Act 2016. Prior to its establishment as a statutory authority, UIDAI functioned as an attached office of the Planning Commission (now NITI Aayog) vide its Gazette Notification No.-A43011/02/2009-Admn.I) dated 28th January, 2009. Later, on 12 September 2015, the Government revised the allocation of business rules to attach the UIDAI to the Department of Electronics & Information Technology (DeitY) of the then Ministry of Communications and Information Technology. UIDAI was created with the objective to issue Unique Identification numbers (UID), named as "Aadhaar", to all residents of India that is (a) robust enough to eliminate duplicate and fake identities, and (b) can be verified and authenticated in an easy, cost-effective way. Under the Aadhaar Act 2016, UIDAI is responsible for Aadhaar enrolment and authentication, including operation and management of all stages of Aadhaar life cycle, developing the policy, procedure and system for issuing Aadhaar numbers to individuals and perform authentication and also required to ensure the security of identity information and authentication records of individuals.

1.4.2 The objective of Aadhaar is to empower residents of India with a unique identity and digital platform only for the purpose of “identity proof”. The 12-digit identification number is issued to a resident after the individual undergoes the process of Aadhaar enrolment, inter-alia by submitting their demographic and biometric information. More than 140 crore Aadhaar numbers have been generated and issued to the residents of India, so far.

1.4.3 Once residents enroll, they can use the Aadhaar number voluntarily to authenticate and establish their identity using electronic means or through offline verification, as the case may be, through various modes of authentication as prescribed under Aadhaar Act, 2016 and it eliminates the hassle of repeatedly providing supporting identity documents each time a resident wishes to access services, benefits and subsidies.

1.4.4 UIDAI issues Aadhaar number to residents only after de-duplicating their demographic and biometric attributes against its entire database. Aadhaar authentication enables elimination of duplicates under various schemes and is expected to generate substantial savings to the government exchequer. It also provides the government with accurate data on beneficiaries enabled direct benefit programs and allows the government departments/service providers to coordinate and optimize various schemes. Aadhaar enables implementing agencies to verify beneficiaries and ensure targeted delivery of benefits.

1.4.5 With the Aadhaar platform providing accurate and transparent information about the services delivery mechanism, government can improve disbursement system and utilize scarce development funds optimally including better human resource utilization involved in the service delivery network. Therefore, to ensure high throughput, inclusion and year-round availability of effective and efficient services and to authenticate anytime, anywhere, UIDAI has created several ecosystems and operates them as per the Aadhaar Act and its regulations catering to residents' needs.

1.4.6 Core Values of UIDAI:

1.4.6.a Believe in facilitating good governance

1.4.6.b Value integrity

1.4.6.c Committed to inclusive nation building

1.4.6.d Pursue a collaborative approach and value our partners

1.4.6.e Strive towards excellence in services to residents and service provider

1.4.6.f Always focus on continuous learning and quality improvements

1.4.6.g Driven by innovation and provide a platform for our partners to innovate

1.4.6.h Believe in a transparent and open organization

### 1.4.7 Composition of Authority

1.4.7.a The Unique Identification Authority of India ("UIDAI") has its Head Office (HO) in New Delhi and eight Regional Offices (ROs) across the country and a technology centre in Bengaluru. UIDAI has two Data Centres, one at Hebbal (Bengaluru), Karnataka and another at Manesar (Gurugram), Haryana.

1.4.7.b The Authority consists of a Chairperson appointed on part-time basis, two part-time Members and a Chief Executive Officer who shall be the Member-Secretary of the Authority.

1.4.7.c The Chief Executive Officer (CEO) is the legal representative and administrative head of the Authority.

1.4.7.d Head Office: At the HO, the CEO is assisted by Deputy Directors General (DDGs) and Joint Secretary level Officers of Government of India, as in-charge of various divisions of UIDAI. The DDGs are supported by Directors, Deputy Directors, Section Officers and Assistant Section Officers, Technical Officer, Project Managers and Technical Executives.

1.4.7.e UIDAI Tech Centre: UIDAI has a Technology Centre located in Bengaluru, Karnataka. The Technology Centre is headed by DDG / Director and the support structure includes Assistant Directors General, Deputy Directors, Section Officers, Technical Officers, Project Managers and Technical Executives.

1.4.7.f Regional Office (RO): Each of the eight Regional Offices of UIDAI is headed by a Deputy Director General (DDG) and the support structure comprises of multiple Assistant Director General, Deputy Director, Section Officer and Assistant Section Officer. Regional Offices with the covering States and UTs under their jurisdiction are listed below:

| **Regional Office** | **States and UTs covered by the RO** |
|---|---|
| RO Bengaluru | Karnataka, Kerala, Tamil Naidu, Puducherry and Lakshadweep |
| RO Chandigarh | Jammu & Kashmir, Punjab, Haryana, Himachal Pradesh and UT of Chandigarh |
| RO Delhi | Uttarakhand, Madhya Pradesh, Delhi and Rajasthan |
| RO Guwahati | Assam, Arunachal Pradesh, Meghalaya, Manipur, Nagaland, Mizoram, Tripura and Sikkim below: |
| RO Hyderabad | Andhra Pradesh, Telangana, Odisha, Chhattisgarh, Andaman and Nicobar |
| RO Lucknow | Uttar Pradesh |
| RO Mumbai | Gujarat, Maharashtra, Goa, Dadar & Nagar Haveli and Daman & Diu |
| RO Ranchi | Bihar, Jharkhand and West Bengal |

# 2 Section 2 – Instructions to Bidders

## 2.1 Online Bid Submission

2.1.1 The Bidders are required to submit soft copies of their Proposals electronically on the GeM Portal, using valid digital signature certificates.

2.1.2 The Bidder should take into account any Corrigendum to this RFP document that may have been published before submitting their Bid Proposals.

2.1.3 All pages of the Bid Proposal being submitted must be legible, signed and sequentially numbered by the Bidder irrespective of the nature of content of the documents before uploading. Ambiguous Bid Proposals will be out rightly rejected.

2.1.4 Any queries relating to the process of online bid submission or queries relating to the GeM Portal in general, may be directed to Portal Toll Free Number: 1800-419-3436.

2.1.5 All the provisions listed out in the Request for Proposal (RFP) issued by UIDAI shall be binding upon the participating Bidders of this RFP.

2.1.6 Sign the Integrity Pact and NDA with the purchaser, formats for the same have been provided as part of this RFP at ***annexure-VI and annexure-XVI***

2.1.7 UIDAI will select service providers, in accordance with the LCS method of selection as detailed in RFP

2.1.8 The Authority / UIDAI is not bound to accept any or all the bids and reserves the right to annul the selection process at any time prior to award of Contract, without thereby incurring any liability to the Bidders.

2.1.9 This RFP document is non-transferable.

2.1.10 No commitment of any kind, contractual or otherwise shall exist unless and until a formal written contract has been executed by or on behalf of Authority. Authority may cancel this bid process at any time prior to a formal written contract being executed by or on behalf of Authority.

2.1.11 At any time, before the last date of submission of Bids, the UIDAI may amend the RFP by issuing an addendum / corrigendum in writing or by standard electronic means and publishing it on GeM portal "http://www.gem.gov.in" or UIDAI website.

The Authority may terminate the RFP process at any time and without assigning any reason. Authority makes no commitments, express or implied, that this process will result in a business transaction with anyone.

## 2.2 Compliant Proposals / Completeness of Response

2.2.1 Bidders are advised to study all instructions, forms, terms, requirements, and other information in the RFP documents carefully. Submission of the bid shall be deemed to have been done after careful study and examination of the RFP document with full understanding of its implications.

2.2.2 Failure to comply with the requirements of this paragraph may render the proposal non-compliant and the proposal may be rejected. Bidders must: -

2.2.2.a Include all documentation specified in this RFP.

2.2.2.b Follow the format of this RFP and respond to each element in the order as set out in this RFP

2.2.2.c Comply with all requirements as set out within this RFP.

## 2.3 Pre-Bid Meeting & Clarifications

2.3.1 The UIDAI may hold a pre-bid meeting with the prospective Bidders as per the Date and Time as mentioned in Fact Sheet.

2.3.2 The Bidders will have to ensure that their queries for Pre-Bid meeting should be sent through email to dd.eu1-hq@uidai.net.in and GeM portal before the date as mentioned in the fact sheet.

2.3.3 The maximum number of participants from a Bidder, who choose to attend the Pre-Bid Meeting, shall not be more than two per Bidder. There representatives attending the Pre-Bid Meeting shall accompany with an authority letter duly signed by the authorized signatory of his/her organization.

2.3.4 Pre-bid queries should be sent in editable excel sheet in below template to the specified email ID before due date.

| S. No. | RFP Page no | RFP Clause no. /point no. | Existing RFP clause | Query/ Clarification sought by Bidder | Reason for suggested Change/ Query |
|---|---|---|---|---|---|
| | | | | | |
| | | | | | |
| | | | | | |

## 2.4 Responses to Pre-Bid Queries

2.4.1 The UIDAI will Endeavour to provide a timely response to all queries. However, there may be no representation or warranty as to the completeness or accuracy of any response or responses. UIDAI does not undertake to answer all the queries that have been posed by the Bidders. The responses to the queries from all Bidders will be distributed to all, if required.

2.4.2 The Corrigendum (if any) and clarifications to the queries from all Bidders will be posted on http://www.gem.gov.inand or UIDAI website. Any such corrigendum shall be deemed to be incorporated into this RFP.

## 2.5 Language

2.5.1 The Proposal should be filled by the Bidder in English language only. If any bid documents submitted in any language other than English, will be summarily rejected.

## 2.6 Late Bids

2.6.1 The bid submitted by telex/telegram/fax/e-mail etc. shall not be considered. No correspondence will be entertained on this matter.

2.6.2 Authority shall not be responsible for any postal delay or non-receipt/ non-delivery of the documents (EMD). No further correspondence on the subject will been entertained.

2.6.3 Authority reserves the right to modify and amend any of the above-stipulated condition/criterion depending upon project priorities vis-à-vis urgent commitments.

## 2.7 Bid Validity

2.7.1 Bids must remain valid up to 180 (One Hundred & Eighty) days from the last date of submission of the bids. UIDAI may request the Bidder(s) for an extension of the period of validity of the bids which may suitably be extended, post such requests.

## 2.8 Authorized Signatory and Authentication of Bids

2.8.1 The person who is signing the Contract on behalf of the company should be authorized signatory. Copy of Power of Attorney authorizing the person to be authorized signatory or the Board Resolution of the Company should be submitted.

## 2.9 Disqualification

2.9.1 The proposal is liable to be disqualified in, inter alia, any of the following cases or in case the Bidder fails to meet the bidding requirements as indicated in this RFP:

2.9.1.a Bid not submitted in accordance with the terms, procedure and formats prescribed in this document or treated as non-conforming proposal.

2.9.1.b Bidder failed to provide clarifications related thereto, when sought;

2.9.1.c The Bidder's proposal is conditional and has deviations from the terms and conditions of RFP.

2.9.1.d Received in an incomplete form. The proposal is received after the due date and time.

2.9.1.e The proposals are not accompanied by all the requisite documents and/or are not in the prescribed format.

2.9.1.f The proposal is submitted without the EMD/Bid security declaration as per the format specified at ***annexure III*** in the RFP.

2.9.1.g The information submitted in the proposal is found to be misrepresented, misleading, false representation, incorrect or false, accidentally, unwittingly, or otherwise, at any time during the processing of the contract (no matter at what stage) or during the tenure of the contract

2.9.1.h In case any one party submits multiple proposals or if common interests are found in two or more Bidders, the Bidders are likely to be disqualified, unless additional proposals/Bidders are withdrawn upon notice immediately.

2.9.1.i The commercial proposal is enclosed within the technical or any other proposal or vice-versa.

2.9.1.j The financial proposal or rates or cost shall not be mentioned into the technical proposal and if any such proposal is found, it shall be rejected.

2.9.1.k An abnormally low bid as per the guidelines issued by the Ministry of Finance, Government of India.

2.9.1.l Any effort by Bidders to influence the Purchaser in the examination, evaluation, ranking of proposals, and recommendation for award of Contract may result in the rejection of the Bidders' Proposal.

## 2.10 Authority's right to accept/reject any or all proposals

2.10.1 Authority reserves the right to accept or reject any Bid Proposal or/ and to annul the RFP process and reject all such Bid Proposals at any time prior to award of Contract, without thereby incurring any liability to the affected Bidders(s) or any obligation to inform the affected Bidder(s) of the grounds for such decision. The decision of the purchaser with regards to the acceptance/ rejection of Pre-qualification/ Technical/ Financial bid proposals will be final and bounding on the bidders. No communication / representation from the bidder in this regards, will be entertained by the purchaser.

## 2.11 Relaxation to be given to MSME

2.11.1 It is informed that MSME are registered under various NIC code for Udhyam Registrars, NIC code or National Industrial Classification is a classification system used to track activities undertaken by a business. NIC code is used by majority of the Government Departments in India to classify businesses.

2.11.2 It is understood that the subject work comes under NIC code ; Division 82: Office administrative, office support, and other business support activities. Hence it is proposed that MSME relaxation on Experience and Turnover only shall be given to the entities registered under the above mentioned NIC code. However, exemption for EMD/Bid security will given to all the MSME registered under any NIC code.

2.11.3 Further purchase preference as per Public Procurement Policy for Micro and Small Enterprises (MSEs) Order, 2012 dated 23.03.2012 issued by Ministry of Micro, Small and Medium Enterprises shall not be applicable as splitting of the work between L1 and L2 in the ratio 60:40 is already considered in the subject RFP.

## 2.12 Consortiums /Sub-contract

2.12.1 Bids received from Consortiums will not be considered. Such bids shall be termed as 'invalid' and regarding sub-contracting refer section V, clause 5.18.7 General conditions of contract.

## 2.13 Evaluation of Bids by UIDAI

2.13.1 Online bids received along with Earnest Money Deposit money and EMD/Bid security declaration will be evaluated on date as mentioned in the Fact Sheet of this RFP. Bid received without Earnest Money Deposit money and EMD/Bid security declaration will be rejected straight way.

2.13.2 The purchaser may waive any minor infirmity or nonconformity or irregularity in a proposal that does not constitute a material deviation, provided such waiver does not prejudice or affects the relative ranking of any bidder.

2.13.3 Bidder may exempt from EMD money as per guidelines issued by Gem.

2.13.4 List of annexures to be submitted with technical proposal and financial proposal respectively

## 2.14 Criteria for Evaluation of Bids

2.14.1 The evaluation will be done in two phases:

2.14.1.a (Pre qualification and Technical Evaluation)

2.14.1.a.i Bidder who fulfilled the pre qualification criteria will further go for technical evaluation only.

2.14.1.a.ii Evaluation will be done by the Tender Evaluation Committee(s) (TEC) setup by UIDAI.

2.14.1.a.iii Any time during the process of evaluation, UIDAI may seek specific clarifications (written / verbal) from any or all Bidders on the recommendation of Tender Evaluation Committee. Any new document created after the end date of Bid submission is not acceptable.

2.14.1.a.iv Proposal failing to meet the pre-qualification criteria will not undergo for technical evaluation.

2.14.1.a.v Bidders who not qualified in Pre qualification or technical evaluation, financial proposal of such bidders will not be open.

2.14.1.b Financial Evaluation

i. Financial proposal of Bidders who qualified in Pre-qualification and Technical Evaluation shall be open.
ii. Financial proposal submitted by Bidder as per the template attached in the RFP.
iii. The bidder is responsible for covering all the taxes and duties within the quoted rates. However, any applicable taxes are to be mentioned separately.
iv. The financial proposal or rates or cost shall not be mentioned into the technical proposal and if any such proposal is found, it shall be rejected.

## 2.15 Letter of Acceptance (LOA)

2.15.1 Prior to the expiration of the bid validity period, UNIQUE IDENTIFICATION AUTHORITY OF INDIA (UIDAI) Bangla Sahib Road, Behind Kali Mandir, Gole Market New Delhi-110001 will notify the successful Bidder in writing or email through a letter.

2.15.2 UNIQUE IDENTIFICATION AUTHORITY OF INDIA (UIDAI) Bangla Sahib Road, Behind Kali Mandir, Gole Market New Delhi-110001shall issue a 'Letter of acceptance (LOA)' to the successful Bidder(s) in writing through post or by email, that its bid has been accepted.

2.15.3 Within 5 days of receipt of the LOA, the Bidder has to render his acceptance of LOA by providing a countersigned and duly stamped copy of LOA to the competent Authority.

2.15.4 The Bidder would be required to furnish Performance Bank Guarantee, PBG (@ 5% of Contract value) within 15 days of issuance of 'Letter of acceptance'. Performance Bank Guarantee should remain valid for at least 60 days beyond the date of completion of all the contractual obligations.

2.15.5 Upon the successful Bidder's furnishing of Performance Bank Guarantee pursuant to this RFP, UIDAI will promptly notify each unsuccessful Bidder and will discharge their Bid Security Declaration.

## 2.16 Signing of Contract

2.16.1 After the Authority notifies the successful Bidder contract that its proposal has been accepted, the Authority shall enter a Contract, incorporating all clauses, pre-bid clarifications and the proposal of the Bidder between competent Authority and the successful Bidder.

2.16.2 Within 7 days from the date of issuance of LOA, the successful Bidder shall sign the Contract with date and return (soft and hardcopy) to UIDAI.

## 2.17 Earnest Money Deposit (EMD)

2.17.1 Bidder shall furnish an Earnest Money Deposit (EMD) of the amount mentioned in the FACT SHEET of this RFP.

2.17.2 Bidder should be submitted Bid Security Declaration as mentioned at ***annexure III***

2.17.3 EMD amount should be submitted in any of the the form: Insurance Surety Bonds, or Account Payee Demand Draft, or Fixed Deposit Receipt, or Bank Guarantee from any of the Scheduled Commercial Banks or payment online transaction. Bidder has to upload scanned copy/proof of the EMD along with bid and has to ensure delivery of hardcopy of the same shall be submitted to the Purchaser before the end date of bid submission.

2.17.4 The EMD should be valid for 45 days beyond the bid validity period.

2.17.5 EMD Bank Guarantee should be issued by any Scheduled Commercial Bank drawn in favor of----------, and Payable at----------.

2.17.6 EMDs of all unsuccessful Bidders will be returned at the earliest after expiry of the final Bid Proposal validity and latest on or before the 30 day after the sign of Contract.

2.17.7 Earnest money Deposit of successful bidder shall be returned within 30 days after receipt of Performance Security (Performance Bank Guarantee) /e-PBG.

2.17.8 The Authority shall not be liable to pay any interest on the EMD.

2.17.9 In case the EMD and/or Bid Security Declaration is not received by the stipulated time then the Purchaser reserves the right to forthwith and summarily reject the Proposal of the concerned Bidder without providing any opportunity for any further correspondence by the concerned Bidder.

2.17.10 Template for EMD bank guarantee has been provided in ***annexure-XI*** of this RFP.

2.17.11 The EMD may be forfeited:

2.17.11.a If a Bidder withdraws the Proposal or increases the quoted prices after opening of the Proposal and during the Bid Proposal validity period or its extended period.

2.17.11.b If it comes to notice that the information/documents furnished in its bid are false, misleading, or forged.

2.17.11.c In the case of a successful Bidder, if the Bidder fails:

2.17.11.c.i To sign the Contract in accordance with clause Signing of Contract; or

2.17.11.c.ii To furnish Bank Guarantee for contract performance in accordance with Performance Bank Guarantee clause.

2.17.12 As per Rule 170 of General Financial Rules (GFRs) 2017, Micro and Small Enterprises (MSEs), NSIC and the firms registered with Ministry of Electronics & IT (MeitY) / Department of Industrial policy and promotion (DIPP) are exempted from submission of Bid Security. Further, in lieu of Bid Security, Bidders to sign "Bid Security Declaration". In case Bidder withdraw or modify their bids during period of validity etc., they will be suspended for the period of 3 years for further participation in UIDAI issued tenders.

## 2.18 Performance Bank Guarantee (PBG)

2.18.1 Performance Bank Guarantee may be furnished in the form of Insurance Surety Bond, account payee demand draft, fixed deposit receipt from a commercial bank, bank guarantee issued/confirmed from any of the Scheduled Commercial Bank in India, or online payment drawn in favor of----------and Payable at ----------before signing of the Contract.

2.18.2 Selected Bidder to provide a Performance Bank Guarantee, within 15 days from issuance of Letter of acceptance.

2.18.3 PBG will be valid for 60 days beyond the Contract end date.

2.18.4 The selected Bidders shall be required to furnish a Performance Bank Guarantee (PBG) equivalent to 5% of the total contract value, derived from the value quoted by the Agency designated as L1, in the form of an unconditional and irrevocable Bank Guarantee.

2.18.5 The selected Bidders shall be required to furnish additional Performance Bank Guarantee (PBG) equivalent to 5% PBG for any change control note (CCN)

2.18.6 Performance Bank Guarantee shall be forfeited in whole or in part and credited to the Authority organization in the event of a breach of contract by the service provider, in the aforesaid event Authority to call upon the Bidder to maintain the said performance security at its original limit by making further deposits, in terms of the signed Contract.

2.18.7 Performance Bank Guarantee would be returned after successful completion of tasks/Contract assigned to ASK and after adjusting/ recovering any dues recoverable/ payable from/ by the Bidder on any account under the contract.

2.18.8 Upon request received from the successful Bidder the EMD will be returned after the submission of PBG.

2.18.9 EMD amount shall not be compensate with PBG.

# 3 Section 3 – Bid Criteria and evaluation

## 3.1 Bid Evaluation Process

3.1.1 Proposals will be reviewed by a Committee of Officers (the "Committee") appointed by the tendering authority (UIDAI) or its designated representative(s). The tendering authority, or such other authority designated by the tendering authority is also referred to herein as the Committee of Officers (or "Committee"). The Committee may be comprised of, or receive assistance from, several teams conducting parallel evaluations.

3.1.2 The authorization shall be in the form of a written power of attorney accompanying the bid or in any other form demonstrating that the representative has been duly authorized to sign the bid on behalf of the Bidder.

3.1.3 Evaluation of the bids will be done in two stages and at the end of every stage, short listed Bidder will be informed of the result through GeM Portal. Evaluations will be based on the proposals, copy of presentations and any additional information requested by the tendering authority. The following is the procedure for evaluation.

3.1.4 Various phases related to bid evaluation stages are outlined as under-

| stage | Bid Covers | Bid Submission |
|---|---|---|
| 1 | Mandatory Documents Required-<br>I. EMD / Bid Security<br>II. Integrity Pact | Scanned copy to be uploaded on GeM portal ( all signed and stamped documents) AND original documents / bank instrument to be submitted in sealed envelope to UNIQUE IDENTIFICATION AUTHORITY OF INDIA (UIDAI) Head Office Bangla Sahib Road, Behind Kali Mandir, Gole Market New Delhi-110001 (as per Factsheet) |
| | Pre-qualification bid | To be uploaded on GeM portal |
| | Copy of presentation | To be uploaded on GeM portal |
| | Technical bid | To be uploaded on GeM portal |
| 2 | Commercial bid | To be uploaded on GeM portal |

## 3.2 Stage 1

### 3.2.1 Pre-Qualification bid

3.2.1.a The documentation furnished by the Bidder will be examined prima facie to see if the technical skill base and financial capacity and other Bidder attributes claimed therein are consistent with the requirements of this project and meet the pre-qualification criteria as specified in table 3.2.2

3.2.1.b Firstly, the Mandatory documents as evidence for EMD/Bid Security and Integrity Pact will be evaluated. If found unresponsive, then further bid evaluation will not be considered for that Bidder.

3.2.1.c Pre-Qualification Proposal will be evaluated as per the table 3.2.2 mentioned in this section and only those Bidders who qualify the requirements will be eligible for the next set of evaluations.

3.2.1.d Each of the Pre-Qualification condition / criteria is mandatory. In case the Bidder does not meet any one of the conditions, the Bidder will be disqualified.

3.2.1.e The evaluation Committee may ask Bidder(s) for additional information/ any clarification sought and/or arrange discussions with their professional, technical faculties to verify the claims made in bid documentation or to submit any document deemed fit by the Committee for evaluation.

3.2.1.f UIDAI shall evaluate all documents mentioned under Pre-Qualification Evaluation Criteria. In case the Bidder does not meet any one of the conditions, the bid will be disqualified.

3.2.1.g The submitted bid shall be evaluated in accordance with the requirements specified under Pre- Qualification Eligibility Criteria in this RFP. A checklist has to be created with proper page-wise indexing of all supporting documents. The nomenclature of each uploaded document should be unique and specific to criteria wise.

3.2.1.h Only pdf format should be accepted for evaluating the bid.

## Pre-Qualification Criteria

### Mandatory Pre-Qualification criteria should be as mentioned below: -

| Sl.no | Parameters | PQ criteria | Supporting documents |
|---|---|---|---|
| 1 | Legal Entity/ Registration of Company | (i) Bidder shall be:<br>A company incorporated in India under the Companies Act, 1956 / 2013 and subsequent amendments thereto; OR Registered Partnership firm / LLP<br>Registered with the GST<br>(ii) The company/Firm should be in operation from last three financial years in India from bid Submission due date. | (i) Valid copy of Certificate of Registration / Incorporation<br>(ii) Valid copy of GST registration Certificate<br>(iii) Copy of GST payments done to GST department for last 3 financial years. (2021-22, 2022-23, 2023-24)<br>(iv) Self-declaration from bidder for business operation in India from last three financial years(2021-22, 2022-23,2023-24) |
| **2** | EMD | INR 60 Crore | Bid security declaration and EMD in the form of Insurance Surety Bonds, Account Payee Demand Draft, Fixed Deposit Receipt, or Bank Guarantee from any of the Scheduled Commercial Banks or payment online transaction receipt towards EMD to be uploaded on GeM portal and Hardcopy to be submitted to UNIQUE IDENTIFICATION AUTHORITY OF INDIA (UIDAI) Head Office Bangla Sahib Road, Behind Kali Mandir, Gole Market New Delhi-110001 within 5 days of end date of Bid submission, format attached at *annexure XI* |
| **3** | Net Worth | The Bidder should have positive net worth in all last three financial years (2021-22, 2022-23, 2023-24) | Copy of Audited Balance Sheet for last three financial year OR Certificate from practicing chartered accountant / Statutory Auditor clearly indicating net worth for last 3 FY (2021-22, 2022-23, 2023-24) |
| **4** | Turnover | Average annual financial turnover of last three years for related services BPO / KPO Operations, IT Services, Outsourcing Services, HR Training and Testing Services, Public Service Delivery, should at-least INR 300 Crore | Audited Balance Sheet for last three (3) financial year OR Certificate from practicing chartered accountant/ Statutory Auditor clearly indicating year wise turnover and average turnover for last three FY (2021-22, 2022-23, 2023-24) from the specific stated business service line. |
| **5*** | Relevant Project Experience | The bidder must have at least five years' experience (ending last date of previous month of closing date of Bid Submission) of providing only Indian Government Citizen Centric Project/BPO/KPO operations for Central/any State Government/PSU /Government Institutions directly in India.<br>1. One contract of value not less than the amount equal to INR 240 Crore including GST; or<br>2. Two contracts each costing not less than the amount equal to INR 150 Cr including GST; or<br>3. Three contracts each costing not less than the amount equal to INR 120 Crore including GST | Copy of Work Order /LOA or Signed copy of Agreement/ Work Completion Certificate AND Client certificate for satisfactory performance under the respective ongoing/completed assignments/projects. |
| **6** | Manpower | The Bidder must have an experience of managing On-roll/Contractual manpower at least 800 or BPO / KPO Operations, IT Services, Outsourcing Services, HR Training and Testing Services, Public Service Delivery type of projects | Self declaration on manpower strength countersigned by HR Head/ Authorized signatory, refer *annexure IV* |
| **7** | Blacklist/ Debarred | The Bidder should not be blacklisted or debarred by UIDAI or the Ministry of Electronics & IT or the Central Government/ PSU in India during last three years as on bid submission due date. | Duly notarized undertaking to this effect shall be submitted by the Bidder on Rs. 100 non-judicial stamp paper format attached at *annexure V* |
| **8** | Integrity Pact | Submission of Integrity Pact | Scanned copy of duly signed integrity pact by Authorized Signatory of the bidding agency format attached at *annexure VI* |

Technical Bid

3.2.1.i Technical proposal of the Bidder will be evaluated who meets all the pre-qualification criteria.

3.2.1.j Each Bidder would be assigned a technical score based on the technical evaluation of the bid.

3.2.1.k The Bidder would be technically evaluated out of 100 marks.

3.2.1.l The Bidder need to attain the minimum 60 score as cut-off marks for further evaluation of commercial bid.

3.2.1.m The bidder has to submit copy of presentation along with technical proposal.

Technical Qualification Criteria

The evaluation Committee will evaluate the Technical Proposals and Presentation based on the technical evaluation criterion as provided below:

| # | Evaluation Criteria | Scoring | Supporting Documents |
|---|---|---|---|
| 1 | **Number of State Coverage:**<br>Experience in implementing/setting up of BPO /KPO Centers / any kind of ICT based Service Delivery to citizens or any related services in different States/UTs of India | 01 States/UTs = 5 marks<br>02 to 4 States/UTs = 7 marks<br>>4 States/UTs = 10 Marks (maximum) | Work Order/LOA or Signed copy of Agreement/MSA AND Client certificate for satisfactory performance under the respective ongoing / completed assignments / projects. |
| 2 | **Number of physical Centers/Locations:**<br>Experience in successfully executing /Executed physical centers in any Government Citizen Centric Project/BPO/KPO operations in the last 5 financial years for Central/any State Government/PSU /Government Institutions directly in India | Up to 5 centers =5 Marks<br>06 to 10 centers =10 Marks<br>More than 10 centers = 15 marks (maximum) | Work Order/LOA/Contract letter to be enclosed clearly stating the centers operated/ executed. |
| 3 | ****Experience in similar Projects:**<br>Experience in implementing Government ICT Projects or BPO/KPO operations in the last 5 financial years with each project or more (including delivery, installation of Hardware / manpower deployment / operations of centers) for service delivery within India | 01 Projects = 5 Marks<br>02 projects = 10 Marks<br>More than 02 Projects = 15 Marks (maximum) | Work Order/LOA/Contract letter and Client Satisfactory certificate for implementation of project, clearly stating the value for each project |
| 4 | **Turnover:**<br>Average annual financial turnover of last three years FY (2021-22, 2022-23, 2023-24) for related services (BPO / KPO Operations, IT Services, Outsourcing Services, HR Training and Testing Services, Public Service Delivery). | 300 Crore to 400 Crore = 5 Marks<br>INR 401 Crore to 500 Cr = 10 Marks<br>Above 500 crore = 15 arks (maximum) | CA Certificate for preceding 3 Financial years (2021-22, 2022-23, 2023-24) |
| 5 | **Manpower:**<br>An experience of managing On-roll/Contractual manpower of minimum strength of resources | 800 to 900 manpower = 10 marks<br>901 to 1000 manpower = 15 marks<br>Above 1000= 20 marks (maximum) | Self declaration on manpower strength countersigned by HR Head/Authorized signatory, refer *annexure IV* |

| | | | |
|---|---|---|---|
| **6** | **Technical presentation** | Bidder would be required to submit the technical presentation about the experience and plan for execution and roll out of project in current RFP. Evaluation of technical presentation to be done based on the below points: -<br>a. Roll Out plan including Establishment and operation strategy during the contract period.<br>b. Manpower Deployment Plan<br>c. Past experience of executing similar projects<br>d. Monitoring and internal audit mechanism<br>e. Incentive policies for their resources<br><br>**Maximum 25 MARKS** | **Presentation has to be submitted along with the bid with file name "Presentation_UIDAI_<bidder name>"** |

** Any project under running condition may be consider for experience evaluation if bidder has completed 50% of total work assigned in original work order.

## 3.3 Stage 2:

## Commercial Bid

3.3.1.a The Commercial Bids of the "Technically Qualified Bidders" only will be evaluated

3.3.1.b The commercial bidding parameter shall be the single **Weighted average price** for all type of Aadhaar transactions [Enrolment, Biometric Update (with or without demographic update), Demographic Update and Document only update]. Bidders need to enter their quote as a single **Weighted average price** for any type of Aadhaar transaction in "Col-A" in the commercial bid format, all other fields are fixed/non-editable, please refer ***annexure-XVII***: commercial bid format. The amount in Rupees calculated in the excel sheet to be fed in GeM system, the same excel sheet shall be uploaded in financial section (in PDF format) which will be visible at the time of evaluation of price bid. The offer where there is difference between entered value and the value calculated in the excel sheet will be summarily rejected.

3.3.1.c Aadhaar Enrolment and Update transactions for the financial year 2023-24 are given below for reference; future transaction number may vary from the mentioned financial year. The Purchaser does not commit to maintain the current transaction volume.

| Sl.n | Enrolment/Update Type | Number of Transactions |
|---|---|---|
| 1 | 0-5 years new Enrolment | 1,85,90,539 |
| 2 | Above 5-year new Enrolment | 84,90,002 |
| 3 | Biometric Update (with or without demographic update) | 85,088,624 |
| 4 | Demographic Update | 112,422,616 |

3.3.1.d As of now, following Aadhaar enrolment/updation services are available through Aadhaar centres, UIDAI self service update portal (SSUP) and Child Enrolment Lite Client - CELC (Hand held devices):

| Sl.No | Service type | Aadhaar centre | SSUP | CELC |
|---|---|---|---|---|
| 1. | Child Enrolment (0-5 years) | Yes | No | Yes |
| 2. | Enrolment of individual above 5 years | Yes | No | No |
| 3. | Biometric Update (With or Without demographic update) | Yes | No | No |
| 4. | Demographic Update (address, name, gender, DoB, mobile, email | Yes (All) | Only Address | Only Mobile |
| 5. | Document Update | Yes | Yes | No |
| 6. | Find and download Aadhaar (Print) | Yes | Yes | No |

Note: It might so happen that some more services (e.g. mobile update or any other) may also be available through SSUP in future

3.3.1.e The Bidder quoting lowest bid-amount shall be declared as lowest bid (L1) and all others also declared as L2, L3…..Ln.

3.3.1.f The lowest rate L1 bidders, received from a qualified bidder will be treated as the "Discovered Rate".

3.3.1.g On the basis of "Discovered Rate" Service Provider will be paid 125% of the Discovered Rate for each new Enrolment (above 5 years of age), Biometric Update (with or without demographic update) transaction and 75% of the Discovered Rate for each child enrolment (below 5 years), Demographic Update and Document only update transaction.

3.3.1.h The Purchaser shall have the right to reject an abnormally low Bid as per the provisions of this paragraph. An abnormally low Bid is one in which the Bid price, in combination with other elements of the Bid, appears so low that it raises substantive concerns as to the Bidder's capability to perform the Contract at the Bid price. The Purchaser may, in such cases, seek written clarifications from the Bidder, including detailed price analysis of its Bid price, concerning the scope, the schedule, allocation of risk and responsibilities, and any other requirements of the RFP. If, after evaluating the price analysis, the Purchaser determines that the Bidder has substantively failed to demonstrate its capability to perform the Contract at the Bid price, the Purchaser may reject the Bid, and evaluation may proceed with the next ranked Bidder.

3.3.1.i Work shall be distributed between 2 (two) 'Service Providers' for the allocation of work in the ratio of 60:40 subject to rate should be matched with L1

3.3.1.j In case of multiple L1. The GeM has a provision of random selection of L1. For deciding Second Service Provider (L2) the bidder having higher marks in technical evaluation as per clause (clause 3.2.4): Technical Qualification Criteria will be given priority.

3.3.1.k In case total marks scored are same in technical proposal then the bidder scoring higher marks in Presentation will be given priority.

3.3.1.l Once the L1 bidder is identified, the bidder at L2 will be given first rights to match the L1 rate to receive an order for carrying out the services.

3.3.1.m In case, L2 is unable to match the quote by L1, the option shall be passed to L3, this process will be repeated moving from L3 to L4 and so on, till one more successful Bidder emerges, offering the service at the Discovered Rate. In case no one agrees to match the L1 quote, whole contract will go to L1 Bidder.

3.3.1.n Reverse Auction with condition '50% Lowest Priced Technically Qualified Bidders'

3.3.1.o Service Provider will be responsible for purchase, installation and operations of approved number of Aadhaar Enrolment Kits in the proposed district for establishment of ASK. UIDAI expect at least 15 Aadhaar transactions per day per kit of an ASK. However, in case of any shortfall, UIDAI will provide the cost of shortfall in Aadhaar transaction at the rate of average of 15 Aadhaar transaction per day per kit on monthly basis (aggregate) per service provider. The cost will be as per the discovered rate in the contract. The payment of shortfall will start from the next month of the business commencement.

3.3.1.p The Discovered Rate for each Aadhaar Enrolment/Biometric & Demographic Update shall be inclusive of all costs to be incurred by the agency for providing other additional services including but not limited to center facility, its management/ maintenance, manpower, Security, IT equipment installed for the purpose, connectivity etc. specified in the 'Scope of Work'

3.3.1.q Any conditional bids shall be summarily rejected during the evaluation of the financial bids.

## 3.4 Criteria for allocation of work

Consequent to the bidding formalities, the Second Service Provider (L2) shall be directed to match with the quote by L1.

The work shall be distributed between L1 and L2 in the approx ratio of 60:40. Accordingly the number of eligible districts to be calculated before allotment.

The districts shall be arranged in blocks of 10 districts each, in the sequence of highest to lowest of population. If there are two ASKs proposed in one district then they also will be arranged as District XX_1 and District XX_2.

Alternate Districts shall be allocated to L1 and L2 in each block till 80% allocation is achieved. Remaining 20% districts will be allotted to L1 bidder to maintain the work distribution ratio of 60:40. Example given below;

| Name of 10 District arranged in decreasing order of Aadhaar Transaction | Allocation |
|---|---|
| District 1 | L1 |
| District 2 | L2 |
| District 3 | L1 |
| District 4 | L2 |
| District 5 | L1 |
| District 6 | L2 |
| District 7 | L1 |
| District 8 | L2 |
| District 9 | L1 |
| District 10 | L1 |

Similar allocation process shall be followed for remaining blocks. In the last block it may so happen that number of districts may be less than 10, here also similar methodology will be followed maintaining the ratio of 60:40 and still some districts left it will be assigned to L1 bidder as per the table given below:

| Number of district in block (left out)<10 districts (decreasing order of Aadhaar Transaction) | Allocation districts between L1 & L2 |
|---|---|
| No. of districts 1 | L1 |
| No. of districts 2 | L1, L1 |
| No. of districts 3 | L1, L2, L1 |
| No. of districts 4 | L1, L2, L1, L1 |
| No. of districts 5 | L1, L2, L1, L2, L1 |
| No. of districts 6 | L1, L2, L1,L2, L1, L1 |
| No. of districts 7 | L1, L2, L1,L2,L1, L1, L1 |
| No. of districts 8 | L1, L2, L1,L2,L1,L2, L1, L1 |
| No. of districts 9 | L1, L2, L1,L2,L1,L2, L1, L1,L1 |

## 3.5 Discussion with selected bidder and Finalization of Contract

This will include a discussion of the technical proposal, the proposed technical approach and methodology, work plan, timelines and professional staff for improvement of quality of existing scope of work.

All the confirmations provided by the bidder to the purchaser as part of original bid as well as subsequent submissions, shall be integrated into the contract, ensuring that they do not entail any extra financial burden on the purchaser beyond what was quoted by the bidder.

Discussions will be finalized through drafting of the final contract.

The final contract and other points discussed between the purchaser and the bidder shall be reviewed/ approved by the purchaser.

## 3.6 Letter of Acceptance (LOA)

After completing discussions, the purchaser shall issue a LOA to the successful bidders in writing and promptly notify the selected bidder about the decision taken on the discussion points.

The bidder has to render his acceptance of LOA as per the timeline mentioned in the Fact Sheet.

For Performance Security / Performance Bank Guarantee (PBG):

3.6.1.a The selected bidders shall be required to furnish a performance Bank Guarantee as per the timeline mentioned in the Fact Sheet.

3.6.1.b The performance Bank Guarantee must be submitted after issue of LOA but before signing of the Contract.

3.6.1.c Failure of the successful bidder to submit the Performance Bank Guarantee shall constitute sufficient grounds for the annulment of the award and forfeiture of the bid security (EMD)/ execution of Bid Security Declaration.

3.6.1.d The performance Bank Guarantee shall be equivalent to 5% of the Total Contract Value (TCV) as indicated in the “Letter of Acceptance” issued by the purchaser and submitted in the form of Insurance Surety Bond, account payee demand draft, fixed deposit receipt from a commercial bank, bank guarantee issued/confirmed from any of the Scheduled Commercial Bank in India, or online payment drawn in favor of----------and Payable at ---------- before signing of the Contract. Performance Bank Guarantee should remain valid for a period of 60 days beyond the date of completion of all contractual obligations.

The PBG shall be invoked by the purchaser:

3.6.1.e In case the selected bidder fails to fulfill its contractual obligations during the contract period or

3.6.1.f If purchaser suffers any loss due to bidder's negligence in carrying out the project implementation as per Terms and Condition/timelines mentioned in the signed contract.

3.6.1.g If selected bidder misrepresents the facts/information submitted to UIDAI.

3.6.1.h If the bidder becomes incapable of fulfilling the contract for any reason, purchaser will forfeit the Performance Bank Guarantee (PBG). Regardless of purchaser's rights under the contract, the PBG funds will be paid to purchaser as compensation for any losses incurred due to the bidder's failure to fulfill their obligations.

Purchaser shall also be entitled to make recoveries from the bidder's bills, performance bank guarantee, or from any other amount due to him, an equivalent value of any payment made to him due to inadvertence, error, collusion, misconstruction or misstatement.

Purchaser will release/return the performance bank guarantee once it is confirmed that the bidder has fulfilled their contractual obligations to the satisfaction of purchaser. However, no interest shall be payable on the performance bank guarantee.

Bidder has to obtain a completion certificate from the Purchaser's representative stating the satisfactory completion of the project before requesting the return of PBG.

On submission of this performance Bank Guarantee and after signing of the contract with the successful bidder, EMD of all the bidders would be returned/ refunded without interest.

Upon the successful Bidder's furnishing of performance Bank Guarantee, UIDAI will promptly notify each unsuccessful bidder and will discharge their EMD/Bid Security Declaration.

The format for the Performance Bank Guarantee is provided at *annexure XII* of this RFP.

### 3.7 Signing of the Contract

The successful bidder shall sign the contract after fulfilling all the formalities/pre-conditions mentioned in the Letter of acceptance (LOA) as per the timeline mentioned in Fact Sheet.

The term of the contract resulting from this RFP shall be 6 years from the start date mentioned in signing of the contract document.

# 4 Section 4 – Scope of Work

### 4.1 Background of the Project

The Unique Identification Authority of India (UIDAI) is a statutory authority established under the provisions of the Aadhaar (Targeted Delivery of Financial and Other Subsidies, Benefits and Services) Act, 2016 ("Aadhaar Act 2016") on 12th July, 2016 by the Government of India, under the Ministry of Electronics and Information Technology (MeitY).

Under the Aadhaar Act 2016, UIDAI is responsible for Aadhaar enrolment/update and authentication, including operation and management of all stages of Aadhaar life cycle, developing the policy, procedure and system for issuing Aadhaar numbers to individuals and perform authentication. UIDAI is required to ensure the security of identity information and authentication records of individuals.

Under the Aadhaar Act 2016, UIDAI has been given the responsibility to lay down plan and policies to implement UID scheme, own and operate the UID database, be responsible for its update and maintenance on an ongoing basis. Implementation of the UID scheme, inter alia, entails generating and assigning UID numbers (Unique Identification Numbers called Aadhaar numbers) to the individual. The key role of UID number is that of an enabler – by establishing an identity and providing an identity authentication mechanism that helps Governments design better welfare programs, enables residents to access resources and services more easily wherever they live, and allows agencies and programs to deliver benefits and services effectively and transparently.

4.2 Detailed Scope of work

4.2.1 The primary objective for scope of work of this RFP is to 'Establishing and running District Level Aadhaar Seva Kendra's by the selected Service Provider(s). The broad indicative scope of work / roles and responsibility of service provider have been categorized into different parts which have been furnished in various section of RFP.

4.2.2 The estimated volume of work to be done is indicated in this section, however, UIDAI may conduct a periodic review of the requirement of the project and shall have the liberty to enhance or reduce the volume of work. Subsequently, Service provider on prior approval of UIDAI may increase/ decrease up to +/-25% kits depending upon requirement. The number of operators will increase/decrease accordingly but remain the same on the existing terms of contract. UIDAI can also allow for 25% of kits as CLEC/UCL as per the requirement. The core operations of the established ASK should be completely monitored by the UIDAI appointed as ASK Manager.

4.3 Establishment of Aadhaar Seva Kendra (ASK)

4.3.1 ASKs will act as the core facility for catering to all front-end activities related to Aadhaar Enrolment, Update and other miscellaneous Aadhaar services.

4.3.2 For establishment of ASK, Service Provider to identify a location in the allocated districts and submit to concerned Regional Office for approval. Locations should have proper ventilation and GPS coordinates should be captured at any place inside it. Approval in this regard will be provided by the concerned Regional Office/ UIDAI Head Office in identification/finalization of the same as per plan mentioned clause 4.13.9 in this RFP.

4.3.3 In the event of any dispute between the Service Provider and Regional Office regarding the selection of centre and space, Service Provider may appeal to UIDAI Head Office for resolution of the same. In these circumstances, decision of UIDAI head Office will be final.

4.3.4 Service Provider will be responsible for purchase, installation and operations of approved number of Aadhaar Enrolment Kits in the proposed district for establishment of ASK. UIDAI expect at least 15 Aadhaar transactions per day per kit of an ASK. However, in case of any shortfall, UIDAI will provide the cost of shortfall in Aadhaar transaction at the rate of average of 15 Aadhaar transaction per day per kit on monthly basis (aggregate) per service provider. The cost will be as per the discovered rate in the contract. The payment of shortfall will start from the next month of the business commencement.

4.3.5 All infrastructure for establishing and operational expenses such as costs for ASK premises (Govt. rented / private rented), electricity, water, security, internet charges etc. shall be borne by the Service Provider.

4.3.6 The establishment and day-to-day functioning of the ASK shall be monitored by the Regional Offices concerned.

4.3.7 Approval of ASK to be taken on the design of the layouts before executing the ASK work by the service provider. UIDAI shall approve / reject/ reply to service provider with comments within 5 Business days.

4.3.8 Service Provider will be responsible for complete establishment of UIDAI run District level ASKs at Government premises or private premises as the case may be and all the equipment's at ASK shall be owned by the Service Provider, including but not limited to space acquisition, site preparation, premises security, and installation of every piece of requisite infrastructure. UIDAI shall only be providing the software required for resident enrolment, update and online Appointment Management system (AMS), Token Management System (TMS) for residents on UIDAI Portal.

4.3.9 All ASKs should be designed in the most resident-friendly manner, with all the facilities that will be required to provide the residents with a totally comfortable environment.

4.3.10 All ASKs should have an identical look and feel as it provides a distinct identity to the system and reduces the learning curve for the residents.

4.3.11 A sample layout of ASKs for Model 'A', B' and Model 'C' has been provided in anexxure-XIV of this RFP.

4.3.12 Anexxure-XIV provides the model layout for an ASK, This model is purely indicative. The Service Provider is required to make necessary updates in consultation with UIDAI, based on the site plan.

4.3.13 ASK may be established preferably on the ground floor (One single floor) with proper accessibility for the residents, including for the elderly and physically challenged. Indicative area for Model-A shall be 2500-3000 sq-ft, Model 'B' ASK shall be 1500-2100 sqft and Model-C shall be 800-1000sqft. In case the ASK is situated at any higher floor then facility of lift should be there.

4.3.14 Each counter should have a minimum space of 40 square feet inside the ASK.

4.3.15 The decision to open an additional ASK or to drop a proposed ASK will be the sole prerogative of UIDAI.

4.3.16 The Service Provider should keep analyzing the load and performance conditions at each ASK in order to assess the need for additional counters and/or ASKs. UIDAI may use these analysis and related statistics to arrive at a final decision for opening a new ASK.

4.3.17 Each ASK shall have the following minimum amenities to be provided by the on-board Service Provider:

4.3.17.a Tandem SS Chair at least 48 numbers waiting chairs for model 'A', 24 numbers waiting chairs for model 'B' and 12 numbers of waiting chairs for Model 'C' for residents to wait for their turn at the ASK.

4.3.17.b Adequate working air-conditioning equipment (1 ton AC per 150 sqft.), with adequate ventilation in case of failure of electrical power supply.

4.3.17.c LED based display screen to provide token status to residents to be placed strategically at the waiting area. 2 no. of LED Display screen at Model A, 1 each at Model B and C ASK respectively to be installed.

4.3.17.d Additionally, minimum 43 inches Full HD LED based display panel to be installed inside the ASK for display of UIDAI IEC material / UIDAI digital advertisement. LED Display should consist of USB port, HDMI port and support wifi connectivity. Displaying panel should be managed remotely by advanced, web-based management portal or content management software.

4.3.17.d.i Two (2) LED of 43" display panels are placed in Model A, 1 each at Model B and C ASK respectively.

4.3.17.d.ii UIDAI will provide permission in writing, for use of right of way (ROW) for display of approved IEC digital content.

4.3.17.d.iii Only the duly approved IEC digital content (text / video) by UIDAI to be displayed and run the content by the service provider at all the respective ASK.

4.3.17.d.iv The LED display panel should be wall mounted.

4.3.17.d.v Fire extinguisher, UPS unit and First aid kit should be there in all ASK.

4.3.17.e The successful Bidder shall be liable to replace/repair the items (AC/Display panel) or other accessories found defective during/after the warranty period, at the respective service centers.

4.3.17.f All ASK should be equipped with CCTV cameras. The Service Provider will establish a central monitoring system accessible via internet for the live monitoring of the ASK. Access to this system should be made available to concerned Regional Office. The recordings of the CCTV shall be stored with the Service Provider for a minimum period of 6 months and to be produce on demand.

4.3.18 Conveniently located writing tables for filling up of forms near the helpdesk with basic stationary like Pen, Stapler, and Stapler Pin etc.

4.3.19 A lactation room (or lactorium), a private space of 40 sqft, where mother can breastfeed to infants.

4.3.20 Separate Male and Female Washroom for Model-A, Model-B and Model-C, if common toilet is not available on the same floor of the ASK. At least one unisex washroom to be facilitated in all ASK Model. The condition can be waived off with UIDAI approval based on the situation.

4.3.21 Touch screen based feedback mechanism at the exit near the token collection counter

4.3.22 Public/specified parking facility at all ASKs for Aadhaar applicants with provision to park at least 2 four wheelers and 4 two wheelers (Not applicable in case of ASK in Govt Premises)

4.3.23 Uniform UIDAI branding across all ASKs. The Service Provider shall not be allowed for any co-branding with the UIDAI logo.

4.3.24 ASK to be designed keeping in mind the needs of elderly and physically challenged.

4.3.25 The service provider can start any other Aadhaar related services after obtaining prior approval from UIDAI.

4.3.26 The Authority shall have the right to start any Aadhaar related services as per the change request at the ASK as per mutual understanding.

4.3.27 The salary and allowances of UIDAI appointed ASK Manager and grievance redressal staff shall be borne by the UIDAI.

4.3.28 The service provider has to provide a cabin for ASK Manager appointed by UIDAI and one desk for grievance redressal along with wired internet connection. The hardware for ASK Manager and Grievance redressal staff will be provided by UIDAI.

4.4 Helpdesk service / Facilities Management

4.4.1 Each ASK will have a set of Reception / Help Desk counters to provide general enquiry and application form distribution service.

4.4.2 The personnel deployed at the counters shall maintain a uniform dress code which shall be Formal Shirt & Trousers / Salwar and Kurti with Aadhaar branding, to be designed by the Service Provider in consultation with UIDAI. The Service Provider shall be responsible for supplying the dresses to personnel deployed by him.

4.4.3 All the personnel deployed by the Service Provider shall wear distinctly visible photo-id badges.

4.4.4 Deployment of Security Personnel at each ASK center to ensure safety and security.

4.4.5 Proper arrangement of the Housekeeping for maintaining cleanliness.

4.4.6 The interiors at each ASK shall be done up as per a uniform color pattern to give the same look and feel across the country.

4.4.7 Service Provider to provide facility for color printing e-Aadhaar in A4 size page at the rate fixed by UIDAI.

4.4.8 On direction of UIDAI, the service provider shall also organize the camps and home enrolment provision from time to time with arrangement of manpower, AEKs and other necessary IT equipment's. Service Provider shall be allowed to have an additional KITs for the purpose of conducting camps. However, prior approval of regional office shall be taken for conducting camps.

4.4.9 Specification for Aadhaar Enrolment Kit – ECMP and CELC, details of major IT equipment with minimum specification details so that it should support our enrolment application please refer annexure- XXIV.

4.4.10 In case of any missing biometric/exceptional/white-list case, service provider to give the Aadhaar services in consultation of UIDAI.

4.5 Maintenance of ASK

4.5.1 Maintenance of the ASK shall be the responsibility of the Service Provider. Regular pest control, painting and cleaning activities should be undertaken by the Service Provider.

4.6 ASK Operational schedule

4.6.1 The ASK must be open 7 days a week at least for 8 hours a day with a staggered lunch break of half-an-hour. Approval of extended hours may be given by the Regional Office/UIDAI Head Office on the request of the Service Provider after ascertaining actual need.

4.6.2 ASK operations will be subject to Central Government holiday rules followed by existing UIDAI Offices. The list of holidays and timings of operation (Time and Day) shall be displayed at each ASK.

4.6.3 Depending upon the demand from Aadhaar applicants and after getting approval from UIDAI, Service Provider may be allowed to keep counters at the ASK open beyond office working hours and on holidays for catering to Residents. The extended opening hours and days will have to be decided in advance and in concurrence with UIDAI.

4.7 Manpower Deployment at each ASK

4.7.1 The Service Provider shall employ manpower on monthly salary basis and provide such qualified and experienced personnel as required to carry out the Services at ASK.

4.7.2 One day-off per week shall be allowed to the staff of ASK office has to be arranged in such a way that on any day of the week not more than 15 to 20% of the staff are on weekly off and the entire counter should be functional. The Service Provider shall ensure that during the Service Provider's performance of the Services acceptable to the Purchaser, a Project Manager shall take charge of the performance of such Services. The Project Manager shall act as a single point of Contact.

4.7.3 ASK's resource requirement for Model A, Model B and Model C defined as below:

| **Sl. No.** | **Particulars** | **Model A (16 Kits)** Size 2500-3000sqft | | **Model B (8Kits)** 1500-2100 sqft | | **Model C (4 Kits)** 800-1000sqf | |
|---|---|---|---|---|---|---|---|
| | | **Counters** | **Persons** | **Counters** | **Persons** | **Counters** | **Persons** |
| 1 | Helpdesk/ Token counter | 2 | 2 | 2 | 1 | 1 | 1 |
| 2 | Cash Counter | 1 | 1 | 1 | 1 | | |
| 3 | Verifier | 4 | 4 | 2 | 2 | 1 | 1 |

| | | | | | | | |
|---|---|---|---|---|---|---|---|
| 4 | Operator /Supervisor counter | 16 | 16 | 8 | 8 | 4 | 4 |
| 5 | ASK Operation Manager (appointed by Service Provider) | 1 | 1 | 1 | 1 | 1 | 1 |
| 6 | UIDAI ASK Manager/Feedback-desk # | 1 | 1 | 1 | 1 | 1 | 1 |
| 7 | UIDAI Grievance Redressal # | 1 | 1 | 1 | 1 | Combined to UIDAI ASK Manager | |
| 8 | **Total staff** | **26** | **(24+2) = 26** | **16** | **(13+2) = 15** | **8** | **(7+1) = 8** |

# Person will be appointed and paid by UIDAI and required hardware will also be provided by UIDAI. Service provider provides sitting space (Cabin for UIDAI ASK Manager) and wired internet connection only. ***annexure-XVIII***: Roles and Responsibility of ASK Manager. Grievance redressal official appointed by UIDAI will report to UIDAI ASK Manager.

4.7.4 Ensuring compliance to Indian Laws / Labour laws and other applicable manpower regulatory and statutory taxation requirements.

4.7.5 The manpower shall be deployed by Service Provider for executing operations, management and maintenance of ASK as per terms specified in this RFP.

4.7.6 The Service Provider shall ensure that there is always at least one full time Operation Manager who will also provide grievance redressal to residents. Operation Manager will handle the entire grievance related to appointment booking/portal, Aadhaar enrolment/update process till the exit counter etc. which come under the domain of ASK operations.

4.7.7 Service Provider shall ensure that there is at least one operator/supervisor for each counter at ASK.

4.7.8 To be a Verifier/Operator/ Supervisor/Cash Counter, a person shall qualify for the following criteria:

4.7.8.a The person shall be of age 18 years and above.

4.7.8.b The person shall have a minimum education qualification of graduate level.

4.7.8.c The person shall have been enrolled for Aadhaar and his/her Aadhaar number shall have been generated.

4.7.8.d The person shall have a basic understanding of operating a computer and shall be comfortable with local language keyboard and transliteration.

4.7.8.e The person shall have basic English and Local Language proficiency

To be an operator, person shall have obtained “Operator Certificate” from a Testing and Certification Agency appointed by UIDAI. Similarly, to be a supervisor, person shall have obtained “Supervisor Certificate” from a testing and Certification Agency appointed by UIDAI.

4.7.8.f The cash counter person shall have relevant experience in the same field of at least 6 months and should be accountable for counter cash management.

4.7.9 Manpower On-boarding Process:

4.7.9.a Service Provider shall ensure that all the manpower deployed fo reach ASK undergo training for basic etiquettes and communication skills for customer interaction.

4.7.9.b Learning Management training programs need to be given to each of the Operator/Verifier/Operator/Cash Counter to undergo training on Aadhaar Act, Data Security, Data Privacy etc.

4.7.9.c Service Provider shall ensure to use only UIDAI approved training documents for training of manpower.

4.7.9.d Service Provider shall ensure to have pool of manpower in case of replacement of existing manpower.

4.7.9.e Service Provider to submit requests for operator/supervisor on boarding with UIDAI.

4.7.9.f Any change in manpower, to be made only after informing UIDAI.

4.7.10 The agency shall conduct a thorough background verification of the candidate at its own cost. Background Verification Checks (Identity/Address/Educational) of each deployed manpower resources.

4.7.11 Service Provider should be responsible for Payroll and Expense Management of the deployed manpower resources.

4.7.12 Service Provider to ensure that the mandatory certification of operators/supervisors/verifiers as per UIDAI policy is updated from time to time.

4.8 Compliance with Labour Laws

4.8.1 The Service Provider shall be responsible for compliance of all labour laws, rules, regulations and ordinances applicable in respect of its employees, sub-contractors and Agents (including but not limited to Minimum Wages Act, Provident Fund laws, Workmen Compensation Act etc.). Further, the service provider shall always indemnify UIDAI, in case any demand is levied onto, due to action or inaction of the Service Provider.

4.8.2 Service Provider shall pay at least minimum wages (Semi Skilled worker) and other allowances and benefits such as insurance, gratuity, provident fund, pension, bonus etc. to the persons so hired or engaged as per the legislations in force such as Contract Labour (Regulation and Abolition) Act, Minimum Wages Act, Payment of Wages Act and other legislations for the time being in force.

4.8.3 Service Provider should submit a compliance report on EPF/ESI and other statutory payments related to the ASK employees on a quarterly basis, to UNIQUE IDENTIFICATION AUTHORITY OF INDIA (UIDAI) Bangla Sahib Road, Behind Kali Mandir, Gole Market New Delhi-110001.

4.9 Resident enrolment / Update process

4.9.1 Enrolment/ Update Process begins when a resident approaches an ASK for enrolment / Update either through online appointment booking or walk-in. annexure-XV can be referred to.

4.9.2 Service Provider to make available Enrolment/ Update form prescribed by UIDAI for resident coming for Enrolment/ Update at the helpdesk, for those residents who have not booked appointment online.

4.9.3 The residents will fill up the form as per the instructions provided in the form. If the Resident is unable to fill the form himself / herself, he/she may take assistance from local support from the helpdesk.

4.9.4 The process of operation of ASK shall be as per the guidelines below:

4.9.4.a Those residents who have made online payment shall directly move to the cash counter for the Token receipt. This shall be given to the residents upon verification of payment receipt generated online or through SRN

4.9.4.b Those residents who have not done online payment but have done online appointment booking or are walk-in residents shall move to cash counter for making payment, receiving payment slip and Token receipt.

4.9.5 After Token receipt residents shall move to verifier for verification of the documents carried/submitted by the resident as prescribed by UIDAI in Enrolment / Update form for the purpose.

4.9.6 Verifier to verify the details filled in Enrolment / Update form with the originals and put a signature.

4.9.7 Resident shall then move to workstation as allotted against the token number (displayed on the screen) for enrolment/update.

4.9.8 After completion of enrolment / update resident shall move to exit counter for token submission and filling feedback form.

4.9.9 The enrolment process will also include Document Update, conducting camps, Home Enrollment and any other Aadhaar enrolment / update related services as decided from time to time. However, home enrollment will be done in special cases on prior approval of UIDAI. The cost for home enrollment will be fixed by UIDAI considering time and travel cost. The service charges for Home Enrolment Service will be charged in addition to the normal fee applicable for demographic /biometric update in Aadhaar. The charges and other conditions shall be admissible as the prevailing Home Enrolment policy of UIDAI.

4.9.10 If any resident made online appointment as well as payment done but not able to get services against the appointment then amount shall be refund to resident in such case.

4.10 IT Infrastructure

4.10.1 The 'Token Management System' shall be integrated with the existing 'Appointment Management System (AMS)'. However, each ASK will also have the facility to book / reschedule online appointment for 'online' and 'walk-in' applicants.

4.10.2 Each ASK will require about minimum 50 Mbps connectivity with static IP configuration. However, the Service Provider may increase or decrease the required bandwidth / hardware as per its experience/requirement during the operation of ASK.

4.10.3 Timely upgradation of the software/security patches released by the OEM. Installation of the valid Antivirus software in all Aadhaar Enrolment kit.

4.10.4 Generator and UPS backup (for all devices including servers, PC's, and lights and fans including 50% load backup for Air Conditioners).

4.10.5 One Enrolment/Update Kit setup as per UIDAI specification for each counter at ASK

4.10.6 In addition to normal Aadhaar Enrolment kits, two CELC KIT to be mandatorily available for Type A and Type B Models ASK and One CELC Kit for Type C Model ASK these KITS can be run by existing operators.

4.11 Appointment mechanism (online /offline)

4.11.1 The appointment management system shall also consist of payment gateway for receiving the payment from the residents and facilitate the resident to cancel or reschedule the appointment.

4.11.2 The online payment system shall include but not limited to services of Net banking, Credit/Debit cards, UPI payments, online wallets and other multi-option online payment modes to facilitate easier payment methods to residents.

4.11.3 Resident should be provided with an option to avail the Aadhaar Services after fixing an online appointment and through walk in. In case of walk-in residents served at the ASK, the Service Provider book a spot appointment for the resident before starting service.

## 4.12 Information /Data Security

4.12.1 Service providers need to provide the Undertaking for Data and Information and Security as per ***annexure-XIII***

## 4.13 Insurance

4.13.1 Service Provider shall be responsible for any legal, security and medical issues related to personnel deployed for the project including their insurances.

4.13.2 The Authority will not be liable for any damage/loss to assets, resources and manpower deployed by the Service Provider for ASK centers.

4.13.3 The Service Provider shall procure all Insurance policies to include requisite insurance coverage as applicable including but not limited to Comprehensive general liability insurance and /or third-party accident insurance to safeguard any eventuality while the employees of the Service Provider are on duty.

4.13.4 Service Provider should be responsible for timely renewal of insurance policies before the lapsed period.

The risks and the coverage shall be as follows:

4.13.5 Third Party liability insurance, with a minimum coverage of the value of the Contract

4.13.6 Professional liability insurance, with a minimum coverage of the value of the Contract

4.13.7 Purchaser's liability and workers' compensation insurance in respect of the Personnel of the Service Provider and in accordance with the relevant provisions of the Applicable Law, as well as, with respect to such Personnel, any such life, health, accident, travel, other insurance or provident fund, ESI as may be appropriate; and

4.13.8 Insurance against loss of or damage to:

4.13.8.a equipment purchased in whole or in part with funds provided under this Contract,

4.13.8.b the Service Provider's property used in the performance of the Services, and

4.13.8.c any outputs prepared by the Service Provider in the performance of the Services.

# 5 Section 5 – General Conditions of the Contract (GCC)

## 5.1 Relationship between the Parties

Nothing contained herein shall be construed as establishing a relationship of master and servant or of principal and agent as between the Authority and the Service Provider.

## 5.2 Law Governing Contract

This Contract, its meaning and interpretation, and the relation between the Parties shall be governed by the Applicable Laws of India.

## 5.3 Notices

Any notice, request or consent required or permitted to be given or made pursuant to this Contract shall be in writing. Any such notice, request or consent shall be deemed to have been given or made when delivered in person to an authorized representative of the Party to whom the communication is addressed, or when sent to such Party at the address specified in the contract. A Party may change its address for notice here under by giving the other Party notice in writing of such change to the address specified in the Contract.

## 5.4 Location

The Services shall be performed at such locations, as the UIDAI Head Office or Regional Office may approve.

## 5.5 Authorized Representatives

Any action required or permitted to be taken, and any document required or permitted to be executed under this Contract by the Authority or the Bidder may be executed by the officials specified in the Contract.

## 5.6 Fraud and Corruption

*Definition*

It is the Purchaser's policy to require that the Authority as well as Service Providers observe the highest standard of ethics during the selection and execution of such contracts. In pursuance of this policy, the Authority defines, for the purpose of this provision, the terms set forth below as follows:

5.6.1.a "Corrupt practice" means the offering, receiving, or soliciting, directly or indirectly, of anything of value to influence the action of a public official in the selection process or in contract execution;

5.6.1.b "Fraudulent practice" means a misrepresentation or omission of facts in order to influence a procurement process or the execution of a contract to the Purchaser; and includes collusive practice among Bidders, prior to or after bid submission, designed to establish bid prices at artificially high or non-competitive level sand to deprive the Authority of the benefits of free and open competition.

5.6.1.c "Collusive practices" means a scheme of arrangement between two Or more Bidders, with or without the knowledge of the Purchaser, designed to establish prices at artificial, non-competitive levels;

5.6.1.d "Coercive practices" means harming or threatening to harm, directly or indirectly, person sort heir property to influence their participation in a procurement process, or affect the execution of a contract;

*Measures to be taken by the Purchaser*

The Authority may terminate the Contract if it determines at any time that representatives of the Service Provider were engaged in corrupt, fraudulent, collusive or coercive practices during the selection process or the execution of that Contract, without the Service Provider having taken timely and appropriate action satisfactory to the Authority to remedy the situation;

The Authority may also sanction against the Service Provider, including declaring the Service Provider ineligible, either indefinitely or for a stated period of time, to be awarded a Contract if it at any time determines that the Service Provider has, directly or through an agent, engaged in corrupt, fraudulent, collusive or coercive practices in competing for, or in executing, a Purchaser-financed Contract.

*Commissions and Fees*

Authority may require the successful Service Provider to disclose any commissions or fees that may have been paid or are to be paid to agents, representatives, or commission agents with respect to the selection process or execution of the Contract. If asked for the information disclosed must include at least the name and address of the agent, representative, or commission agent, the amount and currency, and the purpose of the commission or fee.

*Interpretation*

In this Contract unless a contrary intention is evident:

5.6.1.e The clause headings are for convenient reference only and do not form part of this Contract;

5.6.1.f Unless otherwise specified, a reference to a clause number is a reference to all of its sub-clauses;

5.6.1.g Unless otherwise specified, a reference to a clause, sub-clause or section is a reference to a clause, sub-clause or section of this Contract including any amendments or modifications to the same from time to time;

5.6.1.h A word in the singular includes the plural and a word in the plural includes the singular;

5.6.1.i A word importing a gender includes any other gender;

5.6.1.j A reference to a person includes a partnership and a body corporate;

5.6.1.k A reference to legislation includes legislation repealing, replacing or amending that legislation;

5.6.1.l Where a word or phrase is given a particular meaning, it includes the appropriate grammatical forms of that word or phrase which have corresponding meanings;

5.6.1.m In the event of an inconsistency between the terms of this Contract and the Bid document and the Proposal, the terms of this Contract hereof shall prevail.

## 5.7 Taxes and duties

5.7.1 Service Provider shall pay all such payable direct and indirect taxes, duties, fees, and other impositions as applicable under the Applicable Laws of India.

5.7.2 Service Provider shall be subject to taxes, but not limited to GST, duties, fees, levies etc. on amounts payable by the Authority under the Contract. If there is any reduction or increase in duties and taxes due to any reason whatsoever, after submission of bid or Notification of Award, the same shall be passed on to the Purchaser.

5.7.3 If, after the date of this Contract, there is any change in the Applicable Laws of India with respect to taxes and duties, which are directly payable by the Service Provider for providing the services i.e. service tax or any such applicable tax from time to time, which increases or decreases the cost incurred by the Service Provider in performing the services, then the remuneration and reimbursable expenses payable to Service Provider under this Contract shall be increased or decreased accordingly by agreement between the parties hereto, and corresponding adjustment shall be made.

5.7.4 The Purchaser may seek the Service Provider to submit the compliance report as and when required.

## 5.8 Entire Agreement

5.8.1 This Contract contains all covenant, stipulations and provisions agreed by the Parties. No agent or representative of either Party has authority to make, and the Parties shall not be bound by or be liable for, any other statement, representation, promise or agreement not set forth herein.

## 5.9 Modifications or Variations

5.9.1 Any modification or variation of the terms and conditions of this Contract, including any modification or variation of the scope of the Services, may only be made by written agreement between the Parties. However, each Party shall give due consideration to any proposals for modification or variation made by the other Party. For any modification or variation, firstly written consent of Authority is required.

## 5.10 Force Majeure

*Definition*

5.10.1 For the purposes of this Contract, "Force Majeure" means an event which is beyond the reasonable control of a Party, is not foreseeable, is unavoidable and not brought about by or at the instance of the Party claiming to be affected by such events and which has caused the non- performance or delay in performance, and which makes a Party's performance of its obligations hereunder impossible or so impractical as reasonably to be considered impossible in the circumstances, and includes, but is not limited to, war, riots, civil disorder, earthquake, fire, explosion, storm, flood, pandemic situations or other extreme adverse weather conditions, strikes, lockouts or other industrial action (except where such strikes, lockouts or other industrial action are within the power of the Party invoking Force Majeure to prevent), confiscation or any other action by Government agencies.

5.10.2 Force Majeure shall not include

5.10.2.a Any event which is caused by the negligence or intentional action of a Party or agents or employees, nor

5.10.2.b Any event which a diligent Party could reasonably have been expected both to take into account at the time of the conclusion of this Contract, and avoid or overcome in the carrying out of its obligations hereunder.

Force Majeure shall not include insufficiency of funds or inability to make any payment required hereunder.

## 5.11 No Breach of Contract

5.11.1 The failure of a Party to fulfill any of its obligations under the Contract shall not be considered to be a breach of, or default under, this Contract in so far as such inability arises from an event of Force Majeure, provided that the Party affected by such an event

5.11.1.a Has taken all reasonable precautions, due are and reasonable alternative measures in order to carry out the terms and conditions of this Contract, and

5.11.1.b Has informed the other Party as soon as possible about the occurrence of such an event.

*Measures to be taken*

5.11.2 A Party affected by an event of Force Majeure shall continue to perform its obligations under the Contract as far as is reasonably practical, and shall take all reasonable measures to minimize the consequences of any event of Force Majeure.

5.11.3 A Party affected by an event of force Majeure shall notify the other Party of such event as soon as possible, and in any case, not later than fourteen (14) days following the occurrence of such event, providing evidence of the nature and cause of such event, and shall similarly give written notice of the restoration of normal conditions as soon as possible.

5.11.4 Any period within which a Party shall, pursuant to this Contract, complete any action or task, shall be extended under mutual consent for a period equal to the time during which such Party was unable to perform such action as a result of Force Majeure.

5.11.5 During the period of their inability to perform the Services as a result of an even to of Force Majeure, the Service Provider, upon instructions by the Purchaser, shall either:

5.11.5.a mobilize; or

5.11.5.b Continue with the Services to the extent possible, in which case the Service Provider shall continue to be paid proportionately and on pro-rata basis, under the terms of this Contract.

## 5.12 Contract Period

5.12.1 The period of Contract shall be in force for 6 (Six) years including the roll-out/ASK establishment period subject to adherence to timelines and as per the Terms and Conditions of the Contract.

## 5.13 Suspension

5.13.1 The Authority may, by written notice of suspension to the Service Provider, suspend all payments to the Service Provider hereunder, if the Service Provider fails to perform any of its obligations under this Contract, including the carrying out of the Services, provided that such notice of suspension:

5.13.1.a Shall specify the nature of the failure,

5.13.1.b Shall allow the Service Provider to remedy such failure, if capable of being remedied, within a period not exceeding thirty (30) days after receipt by the Service Provider of such notice of suspension.

5.13.1.c The suspension of payment will be applicable in cases where the SLAs calculated by UIDAI exceed the PBG amount.

5.13.1.d During the period of suspension Service Provider will not be allowed to perform any activity, UIDAI reserves the right to revoke the suspension after recovery of SLA amount from the pending bills or on deposit of SLA amount to UIDAI, if it is excess to PBG amount deposited by the Service Provider.

## 5.14 Effectiveness of Contract

5.14.1 This Contract shall come into effect on the date the Contract is signed by either Parties or such other later date as may be stated in the contract. The date, Contract comes into effect is defined as the Effective Date.

## 5.15 Commencement of Services

5.15.1 The Service Provider shall begin carrying out the Services as per the implementation plan specified in this RFP.

## 5.16 Expiration of Contract

5.16.1 Unless terminated hereof, this Contract shall expire at the end of such time period, after the Effective Date, as specified in the Contract.

## 5.17 Termination

### 5.17.1 By the Purchaser

5.17.1.a The Authority may, without prejudice to any other remedy for breach of Contract, terminate this Contract in case of the occurrence of any of the events specified in Clause 5.17.1-a and the Performance Bank Guarantee may be liable to be forfeited by UIDAI except in (clause 5.17.1.a.iii). In such an occurrence the Authority shall give not less than ninety (90) days' written notice of termination to the Service Provider:

5.17.1.a.i If the Service Provider does not remedy a failure in the performance of their obligations under the Contract, within ninety (90) days after being notified or within any further period as the Authority may have subsequently approved in writing.

5.17.1.a.ii If the Service Provider, in the judgment of the Authority has engaged in corrupt or fraudulent practices in competing for or in executing the Contract.

5.17.1.a.iii If, as the result of Force Majeure, the Service Provider are unable to perform a material portion of the Services for a period of not less than sixty (60) days.

5.17.1.a.iv If the Service Provider submits to the Authority a false statement which has a material effect on the rights, obligations or interests of the Purchaser.

5.17.1.a.v If the Service Provider places itself in position of conflict of interest or fails to disclose promptly any conflict of interest to the Purchaser.

5.17.1.a.vi If the Service Provider fails to provide the quality services as envisaged under this Contract. The Authority may make judgment regarding the poor quality of services, the reasons for which shall be recorded in writing. UIDAI may decide to give one chance to the Service Provider to improve the quality of the services.

5.17.1.a.vii If the Service Provider has been blacklisted by UIDAI or disqualified for any reason.

5.17.1.a.viii If the Service Provider fails to fulfill its obligations under Contract clauses hereof.

5.17.1.a.ix If the Service Provider becomes bankrupt or otherwise insolvent.

5.17.1.a.x If the Service Provider fails to comply with any final decision reached as a result of arbitration proceedings pursuant to Contract clauses hereof.

5.17.1.a.xi In the event of Service Provider is found:

i. Sub-contracting of work/services without the prior written approval of UIDAI.

ii. Provided incorrect information to UIDAI.

iii. Non-co-operative during audits conducted by UIDAI or auditing agencies appointed for the purpose.

5.17.1.a.xii If the Purchaser, in its sole discretion and for any reason whatsoever, decides to terminate this Contract.

5.17.1.a.xiii In the event the Authority terminates the Contract in whole or in part (except for the reasons in clause 5.17.1.a.iii and clause 5.17.1.a.xi), the Authority may procure, upon such terms and in such manner as it deems appropriate, services similar to those undelivered or not performed, and the Service Provider shall be liable to the Authority for any additional costs for such similar services. However, the Service Provider shall continue performance of the Contract to the extent not terminated.

5.17.1.a.xiv If the Service Provider is found to have committed acts leading to breach of privacy, or not implemented the appropriate controls required for proper security of data or is not in compliance with any Applicable laws of India.

5.17.1.a.xv If the Service Provider discloses any confidential information provided during its engagement with UIDAI, UIDAI may terminate this Contract, forthwith. Upon termination of the Services under this Clause, UIDAI shall not be held liable for any kind of loss incurred to the other party

5.17.2 By the Service Provider

5.17.2.a The Service Providers may terminate this Contract, by giving not less than ninety (90) days in written notice to the Purchaser, (such notice to be given after the occurrence of any of the events specified in Section 5 GCC), in such cases Performance Bank Guarantee may be liable to be forfeited by UIDAI.

5.17.2.a.i If the Authority fails to pay any money due to the Service Provider pursuant to this Contract and not subject to dispute pursuant to Contract scope here of within ninety (90) days after receiving written notice from the Service Provider that such payment is overdue.

5.17.2.a.ii If, as the result of Force Majeure, the Service Provider is unable to perform a material portion of the Services, for a period of not less than Sixty (60)days.

5.17.2.a.iii If the Authority fails to comply with any final decision reached as a result of arbitration pursuant to this Contract.

5.17.2.a.iv If the Authority is in material breach of its obligations pursuant to this Contract and has not remedied the same within Sixty (60) days (or such longer period as the Service Provider may have subsequently approved in writing) following the receipt by the Authority of the Service Provider's notice specifying such breach.

5.17.3 Cessation of Rights and Obligations

5.17.3.a Upon termination of this Contract or upon expiration of this Contract, all rights and obligations of the Parties hereunder shall cease, except:

5.17.3.a.i such rights and obligations as may have accrued on the date of termination or expiration;

5.17.3.a.ii the obligation of confidentiality set forth under this Contract;

5.17.3.a.iii the Service Provider's obligation to permit inspection, copying and auditing of their accounts and records; and

5.17.3.a.iv Any right which a party may have under the Law.

5.17.4 Cessation of Services

5.17.4.a Upon termination of this Contract by notice of either Party to the other pursuant to Clauses depicted in GCC, the Service Provider shall, immediately upon dispatch or receipt of such notice, take all necessary steps to bring the services to a close in a prompt and orderly manner and shall make every reasonable effort to keep expenditures for this purpose to a minimum. With respect to documents, data, and/ or any other material prepared by the Service Provider and equipment and materials furnished by the Purchaser, the Service Provider shall proceed as provided, respectively, as mentioned in this GCC.

5.17.5 Payment upon Termination

5.17.5.a Upon termination of this Contract pursuant to Clauses GC 17.1 or GC 17.2, the Authority shall make the following payments to the Service Provider:

5.17.5.a.i If the Contract is terminated pursuant to Clause GC 17.1 (a), (c), (h), (i), j(i) to j(iii), (k)or 17.2, remuneration pursuant payment clause hereof for services satisfactorily performed prior to the effective date of termination;

5.17.5.a.ii If the agreement is terminated pursuant of general condition of contract in RFP (i.e. 15.17.1.a, the Service Provider shall not be entitled to receive any agreed payments upon termination of the Contract. However, the Authority may consider making payment for the part satisfactorily performed on the basis of Quantum Merit as assessed by it, if such part is of economic utility to the Purchaser. Applicable under such circumstances, upon termination, the Authority may also impose liquidated damages as per the provisions of this agreement. The Service Provider will be required to pay any such liquidated damages to Authority within 30 days of termination date.

5.17.6 Disputes about events of Termination

5.17.6.a If either Party disputes whether an event specified in GCC section hereof has occurred, such Party may, within ninety (90) days after receipt of notice of termination from the other Party, refer the matter to Settlement of Dispute Clause of this RFP, and this Contract shall not be terminated on account of such event except in accordance with the terms of any resulting arbitral award.

5.17.7 Termination of Contract for failure to become effective

5.17.7.a If the selected Service Provider is unable to commence/complete the service within the specified period, as per the scope of work of RFP, UIDAI may declare this Contract null and void and in the event of such a declaration, the Performance Bank Guarantee is liable to be forfeited by UIDAI.

5.17.7.b Notwithstanding the duration of the Contract stated in GCC, UIDAI, without prejudice or liability, reserves the right to terminate the Contract.

5.17.7.c In case of termination of Contract, the Authority shall have right to decide the applicable cost and transfer to any other service provider participated in the tender/run such centers.

5.17.7.d The decision of Authority shall be final in case of transfer of assets to the Purchaser, other Service Provider or not to accept the offer.

5.17.8 Termination of Contract for insolvency

5.17.8.a If the Service Provider becomes bankrupt or otherwise insolvent, the Authority may, at any time, terminate the Contract by giving written notice to the supplier, without compensation to the supplier provided that such termination will not prejudice or affect any right of action or remedy which has accrued or will accrue thereafter to the Purchaser.

## 5.18 Obligations of the service provider

### 5.18.1 General: Standard of Performance

5.18.1.a The Service Provider shall perform the Services and carry out their obligations hereunder with all due diligence, efficiency, in accordance with generally accepted professional standards and practices, and shall observe sound management practices, and employ appropriate technology and safe and effective equipment, machinery, materials and methods. The Service Provider shall always act, in respect of any matter relating to this Contract or to the Services, as faithful advisers to the Purchaser, and shall always support and safeguard the Purchaser's legitimate interests in any dealings with third Parties. The Service provider shall implement procedures and controls to always safeguard the privacy and security of data.

### 5.18.2 Commissions /Discounts

5.18.2.a The payment of the Service Provider shall constitute only payment in connection with this Contract or the Services, and the Service Provider shall not accept for their own benefit any trade commission, discount, or similar payment in connection with activities pursuant to this Contract or to the Services or in the discharge of their obligations under the Contract, and the Service Provider shall use their best efforts to ensure that the Personnel and agents or either of them similarly shall not receive any such additional payment.

### 5.18.3 Prohibition of Conflicting Activities

5.18.3.a The Service Provider shall not engage and shall cause their Personnel as well as and their Personnel not to engage, either directly or indirectly, in any business or professional activities which would conflict with the activities assigned to them under this Contract.

5.18.3.a.i The Service Provider shall keep safe, secure and confidential and protect from unauthorized access, loss or damage of all documents, data and information of any nature provided to the Service Provider for the discharge of services. The Service Provider shall always comply with the provisions of the Aadhaar Act, 2016, the Digital Personal Data Protection Act, 2023 etc.

5.18.3.a.ii The Service Provider shall not store, copy, publish, print, interfere, tamper with or manipulate the information/data received from UIDAI, other than required for discharge of services.

5.18.3.a.iii The Service Provider shall not give access to the information or data collected and received from UIDAI during discharge of services, to any person who is not authorized to handle the information or data. Information should only be given to authorize personnel and only used in the manner prescribed by UIDAI.

5.18.4 General Confidentiality

5.18.4.a Except with the prior written consent of the Purchaser, the Service Provider and the Personnel shall not at any time communicate to any person or entity any confidential information acquired, stored and received from UIDAI in the course of the Services, nor shall the Service Provider and the Personnel make public the recommendations formulated in the course of, or as a result of, the Services.

5.18.5 Insurance to be taken out by the Service Provider

5.18.5.a The Service Provider:

5.18.5.a.i Shall take out and maintain, at their own cost but on terms and conditions approved by the Purchaser, insurance against the risks, and for the coverage, as shall be specified in the RFP; and

5.18.5.a.ii Service Provider shall ensure security for all assets, deployed resources, records, cash, etc. at each ASK.

5.18.5.a.iii Service Provider shall ensure providing all required Insurance covers, including third party cover, for all the assets including hardware (IT and Non-IT) etc. available at each ASK against fire, theft, natural calamities, etc. Any insurance required as per Law shall be ensured by the Service Provider at its own cost. UIDAI will not be liable for any loss or damage of any asset. The cost of obtaining this insurance and its renewals shall be borne by the Service Provider.

5.18.5.a.iv Service Provider shall bear the expenses for availing insurance against the cash at ASK.

5.18.5.a.v The Service Provider shall be responsible for making good, any loss of property on account of any reason whatsoever including misappropriation/fraud/ mishandling etc. by the Service Provider or its resources.

5.18.6 Accounting, Inspection and Auditing

5.18.6.a The Service Provider:

5.18.6.a.i Shall keep accurate and systematic accounts and records in respect of the Services hereunder, in accordance with internationally accepted accounting principles and in such form and detail as will clearly identify all relevant time changes and costs, and the bases thereof, and

5.18.6.a.ii Shall periodically permit the Authority or its designated representative and/or the Purchaser, and up to five years from expiration or termination of this Contract, to inspect the same and make copies thereof as well as to have them audited by auditors appointed by the Authority or the Purchaser, if so, required by the Authority or the Authority as the case maybe.

5.18.6.b The service provider should have a method for periodic internal audit of the ASK in a way that all 100% ASK are audited at least once in 6 months. The reports of the internal audit shall be submitted to Regional Office concerned and they shall have the right to carry out inspection checks, audits of the Service Provider's premises and/ or locations, facilities, or point of delivery of services performed under this Contract.

5.18.6.c All the checklist for internal audit shall be provided by UIDAI, checklist may be change any time as per policy of UIDAI

5.18.6.d The UIDAI Regional Office/ UIDAI Head Office shall have the right to carry out scheduled/ un- scheduled visits to any of the locations, premises & facilities and oversee the processes and operations of the Service Provider.

5.18.7 Sub-contracting

5.18.7.a The Service Provider shall not be permitted to sub-contract any part of its obligations, duties, or responsibilities under this contract, except for housekeeping and security, without prior written approval from the purchaser.

5.18.8 Reporting obligations

5.18.8.a The Service Provider shall submit to the UIDAI Regional Office the reports and documents as and when asked by UIDAI related to functioning of ASK.

5.18.9 Rights to use

5.18.9.a All rights of use of any process, product, service, or data developed, generated, or collected, received from UIDAI or any other task performed by the Service Provider under the execution of the Contract, would lie exclusively with the Authority or its nominated agencies in perpetuity free from all liens, encumbrances, and other third party rights and the Service Provider shall, wherever required, take all steps that may be necessary to ensure the transfer of such rights in favor of the Authority or its nominated agencies.

5.18.10 Safety & Security of Data, Premises, Location/site

5.18.10.a The Data, information, documents provided by the UIDAI Regional Office to the Service Provider is the property of the Purchaser. The Service Provider shall display due diligence in the handling of the said data and be responsible for the Data, thus provided.

5.18.10.b The Service Provider shall not use the information, the name or the logo of the Authority and/or Government of India except for the purposes of providing the services as specified under this Contract.

5.18.10.c The Service Provider shall not use and/or transmit any information, data, layouts, designs, diagrams, storage media (hard disk/tapes) or any other goods/material in physical or electronic form, which are proprietary to or owned by the Purchaser, without prior written permission from the Purchaser.

5.18.10.d The Service Provider shall follow the Security Guidelines issued by UIDAI.

5.18.10.e The Service Provider would be governed by the provisions of the Applicable Laws of India, including but not limited to the Information Technology Act 2000, the Aadhaar Act- 2016, the Digital Personal Data Protection Act, 2023 and all their relevant rules, regulations etc.

5.18.10.f The Authority reserves the right to carry out third party Audits of the Service Provider to ensure compliance of the stated and implicit requirements all the relevant policies.

5.18.11 Equipment, Devices & Materials Provided by the Authority

5.18.11.a Equipment Devices or Materials provided by the UIDAI for the use of Service Provider shall remain the property of Authority. Upon termination or expiration of this Contract, the Service provider shall handover the Equipment Devices &Materials belonging to the Authority.

## 5.19 Intellectual Property Right (IPR)

5.19.1 The intellectual property rights to all the software (including Appointment Management System (AMS) etc.), source codes, outputs, data, and reports developed during and after the execution of this Contract shall remain sole property of the Authority.

## 5.20 Integrity Pact (IP)

5.20.1 Bidders are required to submit in original the pre Contract integrity pact duly signed and witnessed as per *Annexure VI* along with EMD. This will be signed by the authorized signatory of the Bidder with name, designation and seal of the company. Bidders who do not sign the pact shall be disqualified from participating in the Bid process.

## 5.21 Non-Disclosure Agreement (NDA)

5.21.1 The service provider will furnish an undertaking in form of NDA that the Service Provider and its Personnel bound by confidentiality obligation in relation to all proprietary and Confidential Information received by them which shall not be disclosed in any manner.

## 5.22 Payment

5.22.1 In consideration of the Services performed by Service Provider under this Contract, the Authority shall make to the Service Provider such payments and in such manner as per Payment Clause of this Contract.

## 5.23 Currency of payment

5.23.1 All payments shall be made in Indian Rupees.

## 5.24 Good faith

5.24.1 The Parties undertake to act in good faith with respect to each other's rights under this Contract and to adopt all reasonable measures to ensure the realization of the objectives of this Contract.

5.24.2 The Parties recognize that it is impractical in this Contract to provide for every contingency which may arise during the life of the Contract, and the Parties hereby agree that it is their intention that this Contract shall operate fairly as between them, and without detriment to the interest of either of them , and that, if during the term of this Contract either Party believes that this Contract is operating unfairly , the Parties will use their best efforts to agree on such action as may be necessary to remove the cause or causes of such unfairness, but failure to agree on any action pursuant to this Clause shall not give rise to a dispute, subject to arbitration in accordance with Settlement of Dispute Clause hereof.

## 5.25 Arbitration and Dispute settlement

*Amicable Settlement*

5.25.1 Performance of the Contract shall be governed by the terms & conditions of the Contract. In case of dispute arises between the Parties regarding any matter under the Contract, either Party of the Contract may send a written Notice of Dispute to the other Party immediately ("Notice of dispute"). The Party receiving the notice of dispute will consider such notice and respond to it in writing within 30 days after receiving receipt. If that Party fails to respond within 30 days, or the dispute cannot be amicably settled through discussion and negotiation within 60 days following the response of that Party, then such matter of dispute, with a value less than Rs. 10 crore (refer O.M No. F.1/21/ 2024-PPD dated 03-06-2024 issued by Department of Expenditure Ministry of Finance be referred to Arbitration process.

*Arbitration*

5.25.2 In case of dispute arising upon or in relation to or in connection with the Contract, which has not been settled amicably within 60 days, any party can refer such dispute for consisting of Sole arbitrator, to be appointed by both the Parties mutually and jointly. Such arbitration proceedings shall be governed as per the provisions of the Arbitration and Conciliation Act, 1996. The Parties shall have their dispute(s) resolved in terms of Section 29B – Fast track procedure, of the Arbitration and Conciliation Act, 1996 (as amended). Any other fees and costs incurred by the Parties, other than in respect of arbitration proceedings, shall be borne by the respective Parties.

5.25.3 Arbitration proceedings shall be held in New Delhi and the language of the arbitration proceedings and that of all documents and communications between the Parties shall be English.

5.25.4 The decision of the sole arbitrator shall be final and binding upon both the Parties. The expenses of the arbitrators as determined by the arbitrator shall be shared equally by the Authority and the Service Provider. However, the expenses incurred by each party in connection with the preparation, presentation shall be borne by the party itself. All arbitration awards shall be in writing and shall state the reasons for the award.

## 5.26 Adherence to Rules and Regulations

*Adherence to Safety Procedures, Rules, Regulations & Restrictions*

5.26.1 The Service Provider shall comply with the provisions of all labour laws of India including with respect to minimum wage rules, statutory payments, leave, any other rules & regulations and notifications issued there from time to time. All safety and labour laws enforced by statutory agencies and by Authority shall be applicable in the performance of this Contract and the Service Provider shall abide by these laws.

5.26.2 Access to the 'sites and Purchaser's other related locations shall be restricted to only essential personnel belonging to the Service Provider who are genuinely required for execution of work or for carrying out management/ maintenance who have been explicitly authorized by the Purchaser. The Service Provider shall maintain a log of all activities and attendance carried out by each of its personnel.

5.26.3 The Service Provider shall take all measures necessary or proper to protect the personnel and facilities and shall observe all reasonable safety rules and instructions. The Service Provider shall adhere to all security requirement/regulations of the Authority during the execution of the work.

5.26.4 The Service Provider shall take all measures to ensure compliance with all Applicable laws of India and shall ensure that the Personnel are aware of consequences of non-compliance or violation of the Applicable laws of India including the Aadhaar Act, 2016 and Information Technology Act, 2000, the Digital Personal Data Protection Act, 2023 etc.

5.26.5 The Service Provider shall report as soon as possible any evidence, which may indicate or is likely to lead to an abnormal or dangerous situation and shall take all necessary emergency control steps to avoid such abnormal situations. If the Service Provider contravenes any provisions of Aadhaar Act, 2016 and the Regulations framed there under or any other Applicable Law, as applicable to the services rendered under the Contract, Service Provider shall be liable to applicable penal provisions prescribed therein.

5.26.6 The Service Provider shall always indemnify and keep indemnified the UIDAI for any situation arising out of this clause while providing its services under the Project.

## 5.27 Limitation of Liability

Except in case of gross negligence or willful misconduct:

5.27.1.a Neither party shall be liable to the other party for any indirect or consequential loss or damage, loss of use, or loss of profits or interest costs, provided that this exclusion shall not apply to any obligation of the Service Provider to pay liquidated damages to the Purchaser; and Confidentiality obligations; and

5.27.1.b The aggregate liability of the Service Provider to the Authority whether under the Contract, or otherwise, shall not exceed the amount specified in the Contract Price provided that this limitation shall not apply to the cost of repairing or replacing defective equipment, or to any obligation of the Service Provider to indemnify the Authority with respect to patent infringement.

5.27.1.c The Authority shall not be liable to the Service Provider in case of any loss or profits or additional costs incurred etc., after termination of Contract clauses mentioned in General Conditions of this RFP.

## 5.28 MISCELLANEOUS PROVISIONS

5.28.1 Any failure or delay on part of any Party to exercise right or power under this Contract shall not operate as waiver thereof.

5.28.2 The Service Provider shall notify the UIDAI Regional Office and UIDAI Head Office of any material change in their status, prior to such change in writing, where such change would impact on performance of obligations under this Contract.

5.28.3 The Service Provider shall always indemnify and keep indemnified the Authority against all claims/damages etc. for any infringement of any Intellectual Property Rights (IPR) while providing its services under the Project.

5.28.4 The Service Provider shall always adequate insurance for any claims in respect of any damages or compensation payable in consequences of any accident or injury sustained or suffered by its employees or agents or by any other third Party resulting from or by any action, omission or operation conducted by or on behalf of the Service Provider.

5.28.5 The Service Provider shall at all times indemnify and keep indemnified the UIDAI against any and all claims by pertaining to the employees, agent(s), employed engaged or otherwise working for the Service Provider, with respect to their wages, salaries, remuneration, compensation or the like.

5.28.6 The Service Provider shall always indemnify and keep indemnified the Authority against all claims/damages/ penalties/ fines etc. including any third party claim, payable in consequence of any non-compliance of any of the Applicable Laws of India, including but not limited to the Digital Personal Data Protection Act, 2023, etc.

5.28.7 All claims regarding indemnity shall survive the termination or expiry of the Contract.

5.28.8 All materials provided to the Authority by Bidder are subject to Country and State public disclosure laws such as RTI etc.

5.28.9 The Service Provider shall not make or permit to be made a public announcement or media release about any aspect of the Contract, without a written consent from the Purchaser.

# 6 Section 6 – Liquidity Damage, SLA and Payments terms

## 6.1 Liquidity Damage

6.1.1 Damages whose amount the parties designate during the formation of a contract for the injured party to collect as compensation upon a specific breach (e.g., late performance). This is most applicable where the damages are intangible.

6.1.2 Liquidity Damage should be applicable to the selected service provider in the circumstances elaborated in this section:

6.1.2.a When the Service Provider couldn't take remedial actions as per the SLA clauses mentioned in the RFP. The minimum amenities required in any ASK is attached at ***annexure XXI*** (List of Deliverables).

6.1.3 Without prejudice to its other remedies under the Contract, UIDAI may recover from the pending bills or ask the Service Provider to deposit the amount spelt out, as liquidated damages, a sum equivalent to, as per the terms indicated in the bid document subject to maximum limit indicated or may even invoke the EMD/Bid Security or Performance Bank Guarantee (PBG).

6.1.4 The service provider can make a submission regarding the penalties / liquidated damages being imposed on them to the concerned authorized officer In-charge of UIDAI. The concerned officer can discuss the same with the competent authority for waiving off the penalties being imposed. If proper justification is provided by the service provider, then the penalties can be waived off by the competent authority.

## 6.2 SLA for Establishment of Aadhaar Seva Kendra

6.2.1 The Service Level Agreement (SLA) defined for the assignment will specify the expected levels of baseline service to be provided by the Service Provider to UIDAI. The objectives of SLA governance model are to;

6.2.1.a Provide clear reference to deliverable ownership, accountability, roles and responsibilities.

6.2.1.b Present a clear, concise and measurable description of service provisioning at each level.

6.2.1.c Bridge the gap between perceptions of expected service provisioning and actual service support and delivery.

6.2.2 The SLAs are intended to:

6.2.2.a Make explicit and strict expectations that the UIDAI has for performance and availability of deliverables.

6.2.2.b Trigger a process that brings UIDAI and Service Provider's management attention to situations when any aspect drops below an agreed upon threshold or target.

6.2.3 Milestone and its timeline for establishment of ASK are as shown below:

| Sl. no. | Activity and deliverables Milestone | Time Frame |
|---|---|---|
| 1. | Issue of Letter of acceptance | **T0** |
| 2. | Submission of PBG | **T0 + 15 days** |
| 3. | Signing of Contract (Actual start date of contract) | **T (T0+20 days)** |
| 4. | Identification and approval of ASK locations in respect of existing ASKs | **within (T+1month)** |
| 5. | Phase-I: Joint inspection of the ASK locations and commencement of operation of the ASKs in existing ASK districts as identified and approved as per activity at Sl. No. 4. | **within (T+3months)** |
| 6. | Identification and approval of ASK locations to the extent of minimum 40% of total allocated districts to service provider. | **within (T+3 months)** |
| 7. | Phase-II: Joint inspection of the ASK locations and commencement of operation of the ASKs to the extent of minimum 40% of total allocated districts to the service provider as identified and approved as per activity at Sl. No. 6 | **within (T+6 months)** |
| 8. | Phase-III: Identification and approval of ASK locations to the extent of 100% of the allocated districts to service provider. | **within (T+6 months)** |
| 9. | Joint inspection of the ASK locations and commencement of operation of the ASKs to the extent of 100% of the allocated districts to the service provider as identified and approved as per activity at Sl. No. 8 | **within (T+12 months)** |

Note: Minimum 75% of kits should be in functioning then only, the centre will be treated as operational.

| Sl. | Milestone | Timeline | SLA |
|---|---|---|---|
| 1 | **Phase I** - Establishment & commencement of 78 ASKs in locations where existing ASKs are functional | T+3 Months | Model: 'A'<br>SLA: Rs. 12000 per day capping up to Rs. 5000000/-<br>Model: 'B'<br>SLA: Rs. 7000 per day capping up to Rs. 3500000/-<br>Model: 'C'<br>SLA: Rs. 6000 per day capping up to Rs. 2500000/- |
| 2 | **Phase II** - Establishment & commencement of ASKs in 40% allocated districts- including ASK districts and districts as follows:<br>i. ASKs in Andaman and Nicobar Islands, Goa, Ladakh, Manipur, Mizoram, Nagaland, Puducherry and Sikkim as allotted to L1 and L2 service provider<br>ii. 5 ASKs by L1 and 3 ASKs by L2 in States of Andhra Pradesh, Bihar, Gujarat, Karnataka, Madhya Pradesh, Maharashtra, Odisha, Rajasthan, Tamil Nadu, Uttar Pradesh and West Bengal (in addition to ASKs covered in Phase-I)<br>iii. Few additional districts as per the proposal of the service provider so as to cover 40% districts. | T+6 Months | |
| 3 | **Phase III -** Establishment& commencement of ASKs – total allocated district locations to be covered. | T+12 Months | |

Note- The Service Provider shall not be permitted to establish left out ASKs after 24 months of signing of contract (T)

6.2.4 The maximum SLA to be imposed during the Contract period for delay in establishment shall be Rs 50 Lakhs per centre for Model A, Rs 35 Lakhs per centre for B and Rs 25 Lakhs per centre for Model C.

6.2.5 The decision of UIDAI shall be final for imposing SLA and will have power to relax any SLA based on circumstances with approval of Authority.

6.2.6 If the service provider starts the operations in all allocated existing ASKS districts (Phase-I) before the deadline (T+3 months), the number of days they finish early will be deducted from any Service Level Agreement (SLA) that might be applied in Phase-II as per clause 6.2.3. Similarly in case of Phase-II if the 40% of total allocated district locations start operations before the deadline (T+6 months) the number of days they finish early will be deducted from Service Level Agreement (SLA) that might be applied in Phase-III as per clause 6.2.3.

6.2.7 In case the designated service provider fails to establish complete /part of the contract, the SLA shall be recovered from the payment due or by forfeiting Performance Bank Guarantee.

## 6.3 SLA for operations at Aadhaar Seva Kendra

6.3.1 All SLAs other than mentioned for delay in establishment and Liquidity Damage shall be capped to 10% of the invoice value for that month, excluding GST.

6.3.2 Non-compliance of Turnaround Time

| Sl. | Deliverables | Timeline | SLA |
|---|---|---|---|
| 1. | End-to-end turnaround time (from token generation at cash counter till token submission at exit counter) for residents to get the enrolment / update or other miscellaneous Aadhaar serviced one. | 60 minutes | 20% of the rate for the service |

## 6.4 Non availability of Manpower

6.4.1 The service provider needs to provide the manpower as per the defined scope of work to manage all the counters in ASK. In case any person remains absent the service provider must arrange alternate for him.

6.4.2 If Service Provider does not deploy the required manpower or the counter remains un-manned due to unavailability of the manpower for more than two days in a month, there would be a SLA defined in below table and will be deducted from the monthly bills.

| # | Deliverables | Timeline | SLA |
|---|---|---|---|
| 1. | Service of ASK affected due to counter remains non-working or non-availability/functionality issue of Aadhaar Enrolment KIT (except any UIDAI backend issue) | Minimum Operator synced per KIT count in a month:<br>A type ASK 400,<br>B type ASK 200<br>C type 100 count | Rs. 1000/- per day per counter/kit up to 10 days after that Rs. 1500/- per day per counter/Kit |

| | | | |
|---|---|---|---|
| 2 | Counter not working due to unavailability of manpower | Counter not working confirmed by ASK Manager or found by UIDAI Officials/ Representatives | Rs. 2000/- per day per counter/kit upto 10 days after that Rs. 3000/- per day per counter/kit |

Note:

a) Operator synced with different machines in a single day shall Reported by ASK Manager and confirmed by UIDAI Officials/ Representatives be count as one (1)

b) Operator synced multiple times in day shall be count as one (1)

c) This SLA shall be calculated ASK wise and shall not be applicable for closer or restriction in activity due to administrative decision and natural calamities

## 6.5 Non-working / availability of the amenities: **

6.5.1 Amenities mentioned under "Establishment of Aadhaar Seva Kendra (ASK)" have to be provided. Surprise checks shall be conducted by UIDAI officials to ensure the working and availability of amenities. Any deficiency found should be corrected in mentioned working days beyond which following SLA will be imposed.

| # | Defects | Reported | Corrective action timeline & SLA |
|---|---|---|---|
| 1. | Non-availability of minimum infrastructure like chairs etc as per guidelines and non-operation of ACs | Reported by ASK Manager and confirmed by UIDAI Officials/ Representatives and notified in writing | If not rectified within 7 working days of the issue of notice.<br>SLA as Mentioned per day (till the date of compliance submission)<br>A type ASK Rs. 2000,<br>B type ASK Rs. 1000<br>C type Rs. 500 |
| 2 | Non-compliance of Uniforms by the Operators | Reported by ASK Manager and confirmed by UIDAI Officials/ Representatives and notified in writing | If not rectified within 7 working days of the issue of notice.<br>Rs. 500/- per day per person |
| 3 | Non-compliance for not maintaining 6 months of CCTV footage(s) backup. | Backup not available for review as confirmed by ASK Manager or found by UIDAI Officials/ Representatives and notified in writing | If not rectified within 7 working days of the issue of notice.<br>Rs. 50,000/- for non-submission of CCTV footages of 03 months and consecutively Rs.10,000/- per missing month. |
| 4 | Non-availability of parking space | Reported by ASK Manager and confirmed by UIDAI Officials/ Representatives and notified in writing | If not rectified within 7 working days of the issue of notice.<br>Rs.1000/- per day per ASK |

| | | | |
|---|---|---|---|
| 5 | Non-availability of the Generators/Power backup | Reported by ASK Manager and confirmed by UIDAI Officials/ Representatives and notified in writing | If not rectified within 7 working days of the issue of notice.<br>Rs.1,000/- per day per ASK |
| 6 | Non-display of compulsory material like the latest list of acceptable documents, charges, any other IEC material provided for compulsory display. | Reported by ASK Manager and confirmed by UIDAI Officials/ Representatives and notified in writing | If not rectified within 7 working days of the issue of notice.<br>Rs.1,000/- per day per ASK |
| 7 | Non-availability of Token Management System along with public addressing system | Reported by ASK Manager and confirmed by UIDAI Officials/ Representatives and notified in writing | If not rectified within 7 working days of the issue of notice.<br>Rs.1,000/- per day per ASK |
| 8 | Non-deposit of cash collected within T+5 business days excluding bank and public holidays. | Reported by ASK Manager and confirmed by UIDAI Officials/ Representatives and notified in writing | If not rectified within 7 working days of the issue of notice.<br>Rs.5,000/- per day per ASK |
| 9 | Non-availability of licensed software(s) or approved software(s) versions. | Reported by ASK Manager and confirmed by UIDAI Officials/ Representatives and notified in writing | If not rectified within 7 working days of the issue of notice.<br>Rs.1,000/- per kit. |
| 10 | Non-maintenance of hygienic conditions for washrooms and toilets. | Reported by ASK Manager and confirmed by UIDAI Officials/ Representatives and notified in writing | If not rectified within 3 working days of the issue of notice.<br>Rs.500/- per day per ASK |
| 11 | Non-compliance to UIDAI Information Security guidelines issued from time to time. | Reported by ASK Manager and confirmed by UIDAI Officials/ Representatives and notified in writing | If not rectified within 7 working days of the issue of notice.<br>Rs.10,000/- per incident per day. |
| 12 | Non maintenance of Asset registers (both in and out), and feedback system | Reported by ASK Manager and confirmed by UIDAI Officials/ Representatives and notified in writing | If not rectified within 7 working days of the issue of notice.<br>Rs.1,000/- per incident per day. |
| 13 | Denial of conducting camps approved by concerned Regional Office/HO. | Reported by ASK Manager and confirmed by UIDAI Officials/ Representatives and notified in writing | If not rectified within 7 working days of the issue of notice.<br>Rs. 10,000/- per incident. |

Note: These SLAs shall be imposed on the recommendation of Regional Office or SRC committee meeting as the case may be**.**

## 6.6 Operational dis-incentives

6.6.1 For proper monitoring and imposing financial disincentive on Registrars and disassociation/suspension of operators found conducting more mistakes/involved in fraudulent practices, a mechanism is applicable through "Policy for enforcing of Aadhaar (Enrolment and Update) Regulations 2016, processes, standards, guidelines, Data Quality and containing corrupt / fraudulent practices" revised from time to time. The penalties and the actions proposed shall be applicable for ASKs as well. The applicable policy is available at https://uidai.gov.in//images/resource/Policy-for-enforcing-process-guidelines-dated-24-03-2021.pdf

## 6.7 Payments to Service Providers

6.7.1 The Successful Bidder will be eligible for the following payments.

6.7.1.a On the basis of "Discovered Rate" Service Provider will be paid 125% of the Discovered Rate for each new Enrolment (above 5 years of age), Biometric Update (with or without demographic update) transaction and 75% of the Discovered Rate for each child enrolment (below 5 years), Demographic Update and Document only update transaction for carrying out/delivery of services as enumerated in Section- 4.

6.7.1.b Service Provider will be paid for each successful Aadhaar transaction

6.7.1.c The Service Provider shall not be paid for such transaction, which has been rejected because of any mistake of operator.

6.7.1.d The Service Provider shall collect the charges from resident for any services as per the rate authorized by the UIDAI.

6.7.1.e The Service provider collects and deposits the charges against all type of updates (except Mandatory Biometric Update) in UIDAI escrow account within T+5 days where T= Transaction Day (Escrow account will be opened and managed by UIDAI)

6.7.1.f The amount collected @Rs.30/-(or as authorized by UIDAI) from the resident against Find and re-print Aadhaar can be retained by the Service Provider.

**Note:**

a) The amount payable to service provider shall be finalized after considering all SLAs as defined in SLA and Payment Terms.

b) The UIDAI shall make the payment within 30 days of receiving the invoice (complete in all aspects) from the Service Provider.

c) The revision in unit cost shall be applicable after two years of contract. After the initial two years, there will be an escalation of rate as per consumer price index.

d) The money collected from residents via cash counter for the Aadhaar update shall go to the Escrow account held by UIDAI within next T+5 working days, where T= Transaction Day. UIDAI shall open and operate the escrow account.

## 6.8 Terms of Payment

### 6.8.1 The payments in respect of the services shall be made as follows:

6.8.1.a The Service Provider shall submit the invoice for payment based on the MIS report, when the payment is due as per the agreed terms on 'Monthly basis''.

6.8.1.b The Service Provider shall submit the invoices monthly to UIDAI. All the corresponding supporting documents should be attached along with the invoice.

6.8.1.c While raising the invoice, the service provider shall submit the challan copy of deposited GST payment to GST department for last invoice.

6.8.1.d In case of any critical UIDAI Audit finding, UIDAI shall have right to withhold 15% of the monthly applicable payment till such time the agency rectifies the issue and informs the same to UIDAI. UIDAI shall release the withheld payment with the next payment, after rectification of the issue

6.8.1.e In the event of any wrong payment to the Service Provider, the difference shall be adjusted in the subsequent payments.

6.8.1.f All payments under this Contract shall be made to the accounts of the Service Provider specified in the RFP.

6.8.1.g In case of early termination of the Contract, the payment shall be made to the Service Provider as mentioned herewith:

6.8.1.g.i Assessment will be made about work done from the previous payment period, for which the payment is made or to be made till the date of the termination. The Service Provider shall provide details of the output/services performed during this period with supporting documents. Based on such details, the payment shall be calculated based on the specified rate/s and applicable SLAs.

6.8.1.g.ii Payment shall be made after taking into account all the SLAs and deductions as applicable / defined in SLA and signed Contract.

## 6.9 General terms and conditions of Payment Schedule

6.9.1 All eligible payments shall be made by the UIDAI Head Office in favor of the Service Provider.

6.9.2 All taxes shall be applicable as per the prevailing rates.

6.9.3 The release of payments will be as per the terms mentioned in this Contract payment clause. The payment shall be released after deduction of any applicable SLA.

6.9.4 Eligible Payments against invoice submitted (accompanied with all requisite documents) shall be released within 30 days of submission of invoice.

6.9.5 Power to withhold: Notwithstanding anything contained in the payment schedule, if in the opinion of the Purchaser, any work done or supply made or service rendered by Service Provider is deficient in any manner in comparison to the prescribed standards, Authority shall be at liberty to withhold a reasonable portion of the payments due to the Service Provider, till such work / service is made conforming to the prescribed standards. These powers to withhold payments shall be without prejudice to any other power/ right of the Authority under this Contract.

6.9.6 All payments under this Contract shall be made to the account of the Service Provider, provided to UIDAI in this regard.

6.9.7 The Service Provider to intimate any change in the bank account before 30 days of release of next payment to UIDAI.

# 7 Section 7 Change Request and Exit management plan

## 7.1 Change Request

7.1.1 UIDAI, in consultation with the Service Provider, order variations in writing to enlarge or extend, diminish, or reduce the Services and Centers (including addition/deletion of district) or make any alterations in their design, inputs, site, quantities, sequence or timing, dimensions or the method of their execution or the combination and use of materials for the execution thereof or to order any additional service to be performed or any Services not to be performed. The Service Provider should not be entitled to any compensation for any increase/reduction in the quantities of work but shall be paid only for the actual amount of work done. Such variations shall not be more than plus/ minus 15% of the value of the Contract and must be broadly within the original scope/ character and purpose of the original contract. At any time during the currency of the contract, the Purchaser may on request from the contractor, by written order, amends the contract by making alterations and modifications within the general condition of the contract with approval of Competent Authority.

7.1.2 Conditions for Change Control:

7.1.2.a The change order will be initiated only in case, if the Purchaser directs in writing to the Service Provider's requests to carry out the following changes in relation to the services rendered by Service Provider:

7.1.2.a.i the Purchaser directs in writing the Service Provider to incorporate changes to the requirements already covered in the Agreement;

7.1.2.a.ii the Purchaser directs in writing to the Service Provider to include any addition to the scope of work or services covered under this Agreement or delete any part thereof;

7.1.2.a.iii Service Provider or the Purchaser requests to delete any part of the work which will not adversely affect the operational capabilities and functioning of the system and if the deletions proposed are agreed to by the Purchaser and for which cost and time benefits shall be passed on to the Purchaser.

### 7.1.3 Change Management Process

7.1.3.a Change Order in respect of the Agreement will emanate from the Purchaser or Service Provider. Service Provider's authorized Representative, will be responsible for obtaining approval for the change and will initiate the Change Order by completing Change Control Note (CCN) (refer ***annexure XIX*.** CCNs will be submitted to the Purchaser, who will acknowledge receipt of the CCN.

7.1.3.b The Service Provider and the Purchaser, during the term of the Agreement and while preparing the CCN, shall ensure that the change is not beyond the Scope of work.

7.1.3.c Prior to submission of the completed CCN to the Purchaser, the Service Provider will undertake its own internal review of the proposal and obtain all necessary internal approvals. As a part of this internal review process, the Service Provider shall consider the materiality of the proposed change in the context of the MSA and the total effect that may arise from implementation of the change.

### 7.1.4 Costs

7.1.4.a Cost for Preparing CCN: Service Provider shall be responsible for its own costs incurred in the preparation of CCNs and in the completion of its obligations, Service Provider shall meets the obligations as set in the CCN. In the event the Service Provider is unable to meet the obligations as defined in the CCN then the cost of getting it done by third party will be borne by the Service Provider.

7.1.4.b Cost for Change Order: For the purpose of estimating the value for the change orders approved by Purchaser, the cost will be as per rates given in MSA (Master Service Agreement). The Purchaser reserves the right to decide the reasonability of the cost of change order. Taxes will be applicable as per the prevailing laws and rates specified therein.

### 7.1.5 Change Order and SLAs:

7.1.5.a For activities carried out against change orders, the applicability of existing SLAs shall be evaluated by the Purchaser and if found applicable, the same shall continue to be in force. Purchaser may also provide waivers on certain SLAs to enable performance of activities defined as part of change order.

7.1.5.b For activities to be performed in a time bound manner against change orders, Purchaser may define additional milestone SLAs which will have an appropriate SLA Level as defined in the Service Level Agreement.

7.1.5.c In the event that any of the change orders requires definition of new SLAs, Purchaser may add additional SLAs to cover the additional scope of activities as defined in the change orders.

7.1.5.d Any changes to SLAs shall be mutually agreed between the Purchaser and the Service Provider and communicated by the Purchaser in writing as part of the change order issued to the Service Provider.

### 7.1.6 Obligations

7.1.6.a If there is a difference of opinion between the Service Provider and Purchaser's Representative on whether a particular item, work or part of the work constitutes a change order or not, the matter shall be handled as per rule mentioned in Original MSA (Master Service Agreement).

7.1.6.b It shall be binding on Service Provider to implement any proposed changes as per the terms and conditions of the change order, once approval in accordance with above provisions has been given.

7.1.6.c The acceptance criteria for any such 'Change' will remain the same as described in the RFP with respect to the performance and quality parameters.

## 7.2 Exit Management Plan

### 7.2.1 Purpose

7.2.1.a This Schedule sets out the provisions, which will apply on expiry or termination of the Contract.

7.2.1.b The Parties shall ensure that their respective associated entities carry out their respective obligations set out in this Exit Management Schedule.

### 7.2.2 Transfer of Assets

7.2.2.a In case of Contract being terminated by Purchaser, Purchaser reserves the right to ask Service Provider to continue running the project operations for a period of 3 months after termination orders are issued.

7.2.2.b Upon service of a notice under this clause the following provisions shall apply:

7.2.2.b.i Payment to the outgoing Service Provider shall be made to the tune of last set of completed services or deliverables, subject to SLA requirements.

7.2.2.b.ii The outgoing Service Provider will pass on to Purchaser and/or to the Replacement Service Provider(s).

### 7.2.3 Cooperation and Provision of Information

7.2.3.a During the exit management period:

7.2.3.a.i The Service Provider will allow the Purchaser, access to information reasonably required to define the current mode of operation associated with the provision of the services to enable the Purchaser to assess the existing services being delivered.

7.2.3.a.ii promptly on reasonable request by the Purchaser, the Service Provider shall provide access to and copies of all information held or controlled by them which they have prepared or maintained in accordance with this agreement relating to any material aspect of the services (whether provided by the Service Provider or subcontractors appointed by the Service Provider). The Purchaser shall be entitled to a copy of all such information. Such information shall include details pertaining to the services rendered and other performance data.

### 7.2.4 Information, Security and Data

7.2.4.a The Service Provider will promptly on the commencement of the exit management period supply to the Purchaser the following:

7.2.4.a.i information relating to the system(s) managed and services rendered by Service Provider to the Purchaser;

7.2.4.a.ii documentation relating to sub-contractors;

7.2.4.a.iii all current and updated data as is reasonably required for purposes of Purchaser transitioning the services to its Replacement Service Provider in a readily available format nominated by the Purchaser;

7.2.4.a.iv all other information (including but not limited to documents, records and agreements) relating to the services reasonably necessary to enable Purchaser, or its Replacement Service Provider to carry out due diligence in order to transition the provision of the Services to Purchaser, or its Replacement Service Provider (as the case may be).

7.2.4.b Before the expiry of the exit management period, the Service Provider shall deliver to the Purchaser all new or up-dated materials from the categories set out above and shall not retain any copies thereof. In case Service Provider wants to retain any documents for any purpose, they need to seek written permission from the Purchaser to retain the same.

7.2.5 Employees

7.2.5.a Promptly on reasonable request at any time during the exit management period, the Service Provider shall, subject to applicable laws, restraints and regulations (including in particular those relating to privacy) provide to the Purchaser a list of all employees (with job titles) of the Service Provider dedicated to providing the services at the commencement of the exit management period.

7.2.5.b Where any national, regional law or regulation relating to the mandatory transfer of the Agreements of employment from the Service Provider to the Purchaser, or a Replacement Service Provider applicable to any or all of the employees of the Service Provider, then the Parties shall comply with such legal requirements.

7.2.6 General Obligations of the Service Provider

7.2.6.a The Service Provider shall provide all such information as may reasonably be necessary to effect as seamless handover, as practicable in the circumstances to the Purchaser or its Replacement Service Provider and which the Service Provider has in its possession or control at any time during the exit management period.

7.2.6.b For the purposes of Exit plan, anything in the possession or control of Service Provider, associated entity, or sub-contractor is deemed to be in the possession or control of the Service Provider.

7.2.6.c Any possession or control of service provider, associated entity, or sub-contractor can be transfer to Replacement Service Provider or UIDAI at the cost of mutually agreed between both Parties by giving written information from both Parties.

7.2.6.d The Service Provider shall commit adequate resources to comply with its obligations under this Exit Management Plan.

Exit Management Procedure

7.2.6.e The Service Provider shall provide the Purchaser with a recommended exit plan ("Exit Management Plan") which shall deal with at least the following aspects of exit management in relation to the MSA as a whole:

7.2.6.e.i A detailed program of the transfer process that could be used in conjunction with a Replacement Service Provider including details of the means to be used to ensure continuing provision of the services throughout the transfer process or until the cessation of the services and of the management structure to be used during the transfer;

7.2.6.e.ii plans for the communication with such of the Service Provider sub-contractors, staff, suppliers, and any related third party as are necessary to avoid any material detrimental impact on the Purchaser's operations as a result of undertaking the transfer;

7.2.6.e.iii plans for provision of contingent support i.e. any support after the transition period by providing some of the key resources to support the Purchaser or Replacement Service Provider for a reasonable period after transfer, if required.

7.2.6.e.iv The Service Provider shall submit the Exit Management Plan to the Purchaser at least 5 (month) months prior to the expiry of the MSA.

7.2.6.e.v Exit Management Plan shall be presented by the Service Provider to and approved by the Purchaser.

7.2.6.e.vi Service Provider shall revise the Exit Management Plan and submit the final plan at least 3 (month) months prior to the expiry of the MSA.

7.2.6.e.vii The terms of payment as stated in the Terms of Payment Schedule include the costs of the Service Provider complying with its obligations under this Schedule.

7.2.6.e.viii In the event of termination or expiry of MSA, Service Provider shall comply with the Exit Management Plan.

7.2.6.e.ix During the exit management period, the Service Provider shall use its best efforts to deliver the services.

7.2.6.e.x Payments during the Exit Management period shall be made as per the rate mentioned in MSA (Master Service agreement).

# 8 Section 8 – Annexure

## 8.1 ANNEXURE-I: Pre-Qualification Proposal Submission Form

*<To be submitted in company's letterhead>*

To,
Deputy Director,
Unique Identification Authority of India (UIDAI)
Bangla Sahib Road, Behind Kali Mandir,
Gole Market,
New Delhi – 110001

Sub: Pre-Qualification proposal form for RFP 'Establishing and running district level Aadhaar Seva Kendra (ASK)'.

Dear Sir,

With reference to your RFP Document <reference no._____><dated_____> I/we, the undersigned, having examined all relevant documents and understood their contents, hereby submit our offer to provide services for "Establishing and running district level Aadhaar Seva Kendra (ASK)". We are hereby submitting our proposal, which includes this Prequalification proposal, Technical Proposal, and a Commercial Proposal as mentioned in the above RFP through online Gem portal. This submitted proposal is unconditional.

I/We hereby declare that all the information and statements made in this Proposal and in the Appendices are true and correct, nothing has been omitted which renders such information misleading; and all documents accompanying such Proposal are true copies of their respective originals and accept that any misinterpretation contained in it may lead to our disqualification. I/We shall make available to UIDAI any additional information it may deem necessary or require for supplementing or authenticating the Proposal.

I/We declare that I/We have examined and have no reservations to the RFP Documents, including any Addendum/Clarification issued by UIDAI and I/We do not have any conflict of interest in accordance with RFP Document.

I/We undertake, if our Proposal is accepted and we have been engaged for providing the services to UIDAI, we shall abide by the conditions of the RFP and subsequent corrigendum/addendum and service agreement.

I/We understand that you may cancel the Selection Process at any time and that you are neither bound to accept any Proposal that you may receive nor to select the agency, without incurring any liability to the Applicants in accordance with clauses of the RFP document. I/We understand that you have right to reject our application without assigning any reason or otherwise. I/we hereby waive our right to challenge the same on any account whatsoever.

I/We agree and understand that the proposal is subject to the provisions of the RFP document. In no case, shall I/we have any claim or right if proposal is not evaluated or rejected.

I/We agree to keep this offer valid for 180 days after the last date of submission of bids specified in the RFP.

A Power of Attorney in favor of the authorized signatory to sign and submit this Proposal and documents is attached herewith.

The Financial Proposal is being submitted separately as specified in RFP. This prequalification proposal read with Technical Proposal and Financial Proposal shall constitute the Application which shall be binding on us.

I/We certify that thatM/s<_____(Company Name)> has not been

banned from carrying out business either with the any state government / central department in Government of India or the Ministry of Electronics & IT, or UIDAI as on date. I/We also undertake that a similar ban imposed before the award of the Contract under this RFP shall disqualify the company from being considered and all claims arising out of this RFP, other than the refund of the bid security, shall stand forfeited.

I/We certify that M/s<_____(Company Name)> is a Single Applicant in response to your RFP for "**Establishing and running district level Aadhaar Seva Kendra**".

I/We agree and undertake to abide by all the terms and conditions of the RFP Document. I/we hereby unconditionally accept the RFP conditions of UIDAI's RFP documents in its entirety for the above work.

In witness thereof, I/we submit this Proposal under and in accordance with the terms of the RFP Document.

**Yours sincerely,**

Authorized Signature [In full and initials]:
Name and Title of Signatory:
Name of Company:
Head Office Address:
Date:
Seal / Stamp of Bidder:

## 8.2 ANNEXURE-II: Pre qualification- Bidder's Information

*<To be submitted in company's letterhead>*

| # | Particular | Bidders Information |
|---|---|---|
| **1** | Name of Bidder /Agency | |
| **2** | Name of the Managing Director/CEO of the Agency | |
| **3** | Type of company | |
| **4** | Full address of the Registered and Branch Offices | |
| **5** | Year of establishment of firm | |
| **6** | CIN / Registration no. of the Agency | Certificate of Incorporation/Registration no.:<br>Date of COI:<br>COI issued by: |
| **7** | GST Registration No. | |
| **8** | PAN | |
| **9** | Financial Information of company | |
| **10** | Details of the service provider official to whom all reference shall be made regarding this RFP. | Name:<br>Mobile number:<br>Email ID:<br>Office Address: |

| Financial Year | Annual Turnover | Networth |
|---|---|---|
| | | |
| | | |
| | | |
| | | |
| | | |

On behalf of [Bidder's name]
Authorized Signature [In full and initials]:
Name & Title of signatory:
Name of Firm:
Address:
Seal/Stamp of Bidder:

## 8.3 ANNEXURE-III: Pre qualification- EMD / Bid Security Declaration Form

To,
Deputy Director
Unique Identification Authority of India (UIDAI)
Bangla Sahib Road, Behind Kali Mandir,
Gole Market,
New Delhi – 110001

Sub: Pre-Qualification EMD/Bid Security declaration form for RFP 'Establishing and running district level Aadhaar Seva Kendra (ASK)'

Date:
Bid No.:

We, the undersigned, declare that:

We, M/s .....(herein referred as Bidder) understand that, according to bid clause for EMD submission, bids may be supported with a Bid Security Declaration.

We will automatically be suspended from being eligible for bidding in any tender, request for proposal or other similar invite with the Unique Identification Authority of India -UIDAI (herein referred as Purchaser) for the period of three years, starting on bid submission closing date, if we are in breach of any of the following obligation(s) under the bid conditions:-

THE CONDITIONS of this obligation are:

i. If a Bidder withdraws its bid during the period of bid validity specified by the Bidder in the bid; or
ii. If the Formats to prepare the price bid are found to be modified by the Bidder; or
iii. In the case of a successful Bidder, if the Bidder fails:
    a. to accept the Letter of acceptance and sign the Contract in accordance with this above-mentioned RFP;
    b. to furnish Performance Bank Guarantee in accordance with clause of this RFP.

We understand that this declaration shall expire if we are not the successful Bidder and on receipt of purchaser's Letter of acceptance to another Bidder; or sixty days after the validity of the bid; whichever is later.

Sincerely,

(Signature)
(Name & Signature of Authorized Representative of company)

Duly authorized to sign the RFP Response for and on behalf of:
(Name and Address of Company)
Seal/Stamp

## 8.4 ANNEXURE-IV: Pre-qualification- Manpower Strength

*<To be submitted in company's letterhead>*

***Self-declaration for Manpower Strength***

RFP Reference no.: dated:

We confirm that our company, <<company name>>, has minimum 800 numbers of on-roll manpower or contractual manpower resources, as on last date of bid submission for the RFP referred above.

This letter is being issued for the purpose of participation in a bid cited above.

Sincerely,

(Signature)

(Name & Signature of Authorized Representative/HR Head of company) Seal/Stamp

Duly verified and counter signed by Company Secretary / Chartered Accountant:

(Name and Address of Company)

Seal/Stamp

## 8.5 ANNEXURE-V: Pre-qualification- Self declaration for non-black listing

*<To be submitted in company's letterhead>*

RFP Reference no.: dated:

We confirm that our company as on date of submission of the proposal is not blacklisted or banned by any Ministry / Department / attached offices / Subordinate offices under Government of India and any State Government, Autonomous Bodies (established by Central / State Govt), any Central/State PSUs in India for Corrupt, fraudulent or any other unethical business practices, as on bid submission date.

Sincerely,
(Signature)
(Name & Signature of Authorized Representative of company)

Duly authorized to sign the RFP Response for and on behalf of:
(Name and Address of Company)

Seal/Stamp

## 8.6 ANNEXURE-VI: Pre-qualification- Integrity Pact (IP)

*<To be submitted in non-judicial stamp paper>*

(PROFORMA OF INTEGRITY PACT)

*INTEGRITY PACT*

Between

*Unique Identification Authority of India (UIDAI) hereinafter referred to as "The Principal",*

**AND**

**…… hereinafter referred to as "The Bidder/ Contractor"**

**Preamble**

The principal intends to award, under laid down organizational procedures, contract/s for_____ The principal values full compliance with all relevant laws and regulations, and the principles of economic use of resources, and of fairness and transparency in its relations with its Bidder/s and Contractor/s.

In order to achieve these goals, the principal will appoint Independent External Monitor (IEM), who will monitor the tender process and the execution of the Contract for compliance with the principles mentioned above.

*Section 1 - Commitments of the Principal*

(1) The principal commits itself to take all measures necessary to prevent corruption and to observe the following principles:-

a) No employee of the principal, personally or through family members, will in connection with the tender for, or the execution of a Contract, demand, take a promise for or accept, for him/herself or third person, any material or immaterial benefit which he/she is not legally entitled to.

b) The principal will, during the tender process treat all Bidders with equity and reason. The principal will in particular, before and during the tender process, provide to all Bidders the same information and will not provide to any Bidder confidential / additional information through which the Bidder could obtain an advantage in relation to the tender process or the Contract execution.

c) The Principal will exclude from the process all known prejudiced persons.

(2) If the Principal obtains information on the conduct of any of its employees which is a criminal offence under the Bhartiya Nyaya Sanhita (BNS)/Prevention of Corruption Act, 1988(PC Act), or if there be a substantive suspicion in this regard, the principal will inform its Vigilance Office and in addition can initiate disciplinary actions.

*Section 2 - Commitments of the Bidder/ contractor*

(3) The Bidder / Contractor commit itself to take all measures necessary to prevent corruption. He commits himself to observe the following principles during his participation in the tender process and during the Contract execution:

a) The Bidder / Contractor will not, directly or through any other person or firm, offer, promise or give to any of the principal's employees involved in the tender process or the execution of the Contract or to any third person any material or immaterial benefit which he/she is not legally entitled to, in order to obtain in exchange any advantage of any kind whatsoever during the

tender process or during the execution of theContract.

b) The Bidder / Contractor will not enter with other Bidders into any undisclosed agreement or understanding, whether formal or informal. This applies in particular to prices, specifications, certifications, subsidiary contracts, submission or non-submission of bids or any other actions to restrict competitiveness or to introduce cartelization in the bidding process.

c) The Bidder / Contractor will not commit any offence under the relevant BNS/PC Acts; further the Bidder / Contractor will not use improperly, for purposes of competition or personal gain, or pass on to others, any information or document provided by the principal as part of the business relationship, regarding plans, technical proposals and business details, including information contained or transmitted electronically.

d) The Bidders(s)/Contractor(s) of foreign origin shall disclose the name and address of Agents/representatives in India if any. Similarly, the Bidder(s)/Contractor(s) of Indian nationality shall furnish the name and address of foreign principals if any.

e) The Bidder / Contractor will, when presenting his bid, disclose any and all payments he has made, is committed to or intends to make to agents, brokers or any other intermediaries in connection with the award of theContract.

(4) The Bidder / Contractor will not instigate third persons to commit offences outlined above or be an accessory to such offences.

*Section 3 - Disqualification from tender process and exclusion from future Contracts*

(1) If the Bidder, before Contract award or during execution has committed a transgression through a violation of Section 2 or in any other form such as to put his reliability or credibility as Bidder into question, the principal is entitled to disqualify the Bidder from the tender process or to terminate the Contract, if already signed, for such reason.

a) If the Bidder / Contractor have committed a transgression through a violation of Section 2 such as to put his reliability or credibility into question, the principal is entitled also to exclude the Bidder / Contractor from future Contract award processes. The imposition and duration of the exclusion will be determined by the severity of the transgression. The severity will be determined by the circumstances of the case, in particular the number of transgressions, the position of the transgressors within the company hierarchy of the Bidder and the amount of the damage. The exclusion will be imposed for a minimum of 6 months and maximum of 3years.

b) A transgression is considered to have occurred, if the principal after due consideration of the available evidence, concludes that no reasonable doubt is possible.

*Section 4 - Compensation for Damages*

(1) If the Principal has disqualified the bidder from the tender process prior to the award according, the principal is entitled to demand and recover from the bidder liquidated damages equivalent to Earnest Money Deposit / Bid Security or will execute Bid-Securing Declaration.

(2) If the Principal has terminated the Contract according to Section 3, or if the principal is entitled to terminate the Contract according to Section 3, the principal shall be entitled to demand and recover from the Contractor liquidated damages equivalent to Security Deposit / Performance Bank Guarantee.

*Section 5 - Previous transgression*

(1) The Bidder declares that no previous transgressions occurred in the last 3 years with any other Company in any country conforming to the anti-corruption or with any other Public Sector Enterprise in India that could justify his exclusion from the tender process.

(2) If the Bidder makes incorrect statement on this subject, he can be disqualified from the tender process or the Contract, if already awarded, can be terminated for such reason.

*Section 6 - Equal treatment of all Bidders / Contractors / Subcontractors*

(1) The Bidder / Contractor undertakes to demand from all subcontractors a commitment in conformity with this Integrity Pact, and to submit it to the principal before Contract signing.
(2) The principal will enter into agreements with identical conditions as this one with all Bidders, Contractors and Subcontractors.
(3) The principal will disqualify from the tender process all Bidders who do not sign this Pact or violate its provisions.

*Section 7 - Criminal charges against violating Bidders/Contractors/ Subcontractors*

(1) If the Principal obtains knowledge of conduct of a Bidder, Contractor or Subcontractor, or of an employee or a representative or an associate of a Bidder, Contractor or Subcontractor which constitutes corruption, or if the principal has substantive suspicion in this regard, the principal will inform the Vigilance Office.

*Section 8 - External Independent Monitor / Monitors*

(1) The principal will appoint competent and credible external independent Monitor for this Pact. The task of the Monitor is to review independently and objectively, whether and to what extent the parties comply with the obligations under this agreement.
(2) The Monitor is not subject to instructions by the representatives of the parties and performs his functions neutrally and independently. It will be obligatory for him to treat the information and documents of the Bidders/Contractors as confidential. He reports to the CEO, UIDAI.
(3) The Bidder(s)/Contractor(s)accepts that the Monitor has the right to access without restriction to all Project documentation of the principal including that provided by the Contractor. The Contractor will also grant the Monitor, upon his request and demonstration of a valid interest, unrestricted and unconditional access to his project documentation. The same is applicable to Subcontractors. The Monitor is under contractual obligation to treat the information and documents of the Bidder / Contractor / Subcontractor with confidentiality.
(4) The principal will provide to the Monitor sufficient information about all meetings among the parties related to the Project provided such meetings could have an impact on the contractual relations between the Principal and the Contractor. The parties offer to the Monitor the option to participate in such meetings.
(5) As soon as the Monitor notices, or believes to notice, a violation of this agreement, he will so inform the Management of the Principal and request the Management to discontinue or take corrective action, or to take other relevant action. The monitor can in this regard submit non-binding recommendations. Beyond this, the Monitor has no right to demand from the parties that they act in a specific manner, refrain from action or tolerate action.
(6) The Monitor will submit a written report to the CEO, UIDAI within 8 to 10 weeks from the date of reference or intimation to him by the 'Principal' and, should the occasion arise, submit proposals for correcting problematic situations.
(7) If the Monitor has reported to the CEO, UIDAI a substantiated suspicion of an offence under relevant BNS/PC Act, and the CEO has not, within reasonable time, taken visible action to proceed against such offence or reported it to the Chief Vigilance Office, the Monitor may also transmit this information directly to the Central Vigilance Commissioner, Government of India.
(8) The word 'Monitor' would include both singular and plural.

*Section 9 - Pact Duration*

(1) This Pact begins when both parties have legally signed it. It expires for the Contractor 12 months after the last payment under the respective contract, and for all other Bidders 6 months after the Contract has been awarded.

(2) If any claim is made / lodged during this time, the same shall be binding and continue to be valid despite the lapse of this pact as specified above, unless it is discharged / determined by CEO, UIDAI.

*Section 10 - Other provisions*

(1) This agreement is subject to Applicable Laws of India. Place of performance and jurisdiction is the Registered Office of the Principal, i.e., UNIQUE IDENTIFICATION AUTHORITY OF INDIA (UIDAI) Bangla Sahib Road, Behind Kali Mandir, Gole Market New Delhi-110001. The Arbitration clause provided in the main tender document / Contract shall not be applicable for any issue / dispute arising under Integrity Pact.

(2) Changes and supplements as well as termination notices need to be made in writing. Side agreements have not been made.

(3) If the Contractor is a partnership, this agreement must be signed by all partners.

(4) Should one or several provisions of this agreement turn out to be invalid, the remainder of this agreement remains valid. In this case, the parties will strive to come to an agreement to their original intentions.

| | |
|---|---|
| --- | --- |
| For the Principal | For the Bidder /Contractor |
| Place---------- | Witness 1:---------- |
| Date---------- | Witness 2:---------- |

## 8.7 ANNEXURE-VII: Project Description Form

*<To be submitted in company's letterhead for each individual project>*

| # | Particulars | Details |
|---|---|---|
| 1 | Name of Bidder/Agency | |
| 2 | Name of Project | |
| 3 | Name of Client | |
| 4 | Period of project (start–end date) | |
| 5 | Duration of project | |
| 6 | Status of project (Ongoing / completed) | |
| 7 | Contract Value of project (in INR) | |
| 8 | Total no. of locations covered in similar nature of project | |
| 9 | Total no. of manpower engaged on-roll | |
| 10 | Brief description about Nature/ Scope of Work delivered in this project | |
| 11 | Supporting document attached (Work Order / LOI/ MSA/ Client certificate) | |

Name:
Designation:
Date-
Time:
Seal:

## 8.8 ANNEXURE-VIII: Cost calculation Scenarios in case of shortfall in Aadhaar transaction

<To be submitted in company's letterhead>

To,
Deputy Director
Unique Identification Authority of India (UIDAI)
Bangla Sahib Road, Behind Kali Mandir,
Gole Market,
New Delhi – 110001

RFP Ref. No.__Dated__

I, the undersigned certify that <COMPANY NAME>, having its registered office at <Address_____> and present local office at <address> as of <date> or an office in <Name of all the locations--State/District Name> will be opened as per this RFP Contract. I have attached the following documents to substantiate our claim.
<Document Name>

For Name:
Designation:
Date & Time:

Seal:

Business Address: Accepted,

…….. (Signature)

## 8.9 ANNEXURE-IX: Pre qualification- Power of Attorney

*<To be submitted on Rs.100/- non judicial stamp paper.>*

Know by all men by these presents, We…….. (Name of the Bidder and address of their registered office), do hereby constitute, appoint and authorize Mr./Ms……. (name and residential address of Power of attorney holder) who is presently employed with us and holding the position of…… as our Attorney, to do in our Name and on our behalf, all such acts, deeds and things necessary in connection with or incidental to our Proposal for the Selection of RFP 'Establishing and running district level Aadhaar Seva Kendra (ASK)' ,RFP Ref no. dated>, including signing and submission of all documents and providing information / responses to this bid, representing us in all matters and generally dealing with all matters in connection with our Proposal for the said Project. We hereby agree to ratify all acts, deeds and things lawfully done by our said Attorney pursuant to this Power of Attorney and that all acts, deeds and things done by our aforesaid Attorney shall and shall always be deemed to have been done by us.

For Name:
Designation:
Date & Time:
Business Address:
Signature & Seal:

## 8.10 ANNEXURE-X: Pre qualification- Document Checklist

| # | Supporting docs | Compliance (Y/N) | Reference Page no. / document name |
|---|---|---|---|
| 1 | ANNEXURE-I: Pre-Qualification Proposal submission form | | |
| 2 | ANNEXURE-II: Pre-Qualification Bidders Information along with the Net-worth & Turnover evidence document proof as per PQ | | |
| 3 | ANNEXURE-III & XI: EMD - BG - Hardcopy submitted and softcopy to be uploaded AND Bid Security Declaration | | |
| 4 | Copy of Certificate of Registration/ Incorporation | | |
| 5 | Valid copy of GST | | |
| 6 | Self-declaration from Bidder operational from last five financial years in India from bid submission due date | | |
| 7 | Self-declaration for Declaration for setup of local support office | | |
| 8 | ANNEXURE-IV: Self-declaration for Manpower strength | | |
| 9 | ANNEXURE-V : Self-declaration for non-blacklist | | |
| 10 | ANNEXURE-VI: Integrity Pact - Hardcopy submitted and softcopy to be uploaded | | |
| 11 | ANNEXURE-VII: This annexure to be submitted along with the Project Experience evidence document asked in PQ/TQ | | |
| 12 | ANNEXURE-IX– Power of Attorney | | |

## 8.11 ANNEXURE-XI: Format for EMD Bank Guarantee

**(To be stamped in accordance with stamp act)**

Date: DD/MM/YYYY
Bank Guarantee no.:

Unique Identification Authority of India (UIDAI)
Bangla Sahib Road, Behind Kali Mandir,
Gole Market,
New Delhi – 110001

Dear Sir,
Sub: RFP 'Establishing and running district level Aadhaar Seva Kendra (ASK)' RFP no. <_____>dated< _____>In accordance with your proposal reference no. dated _____M/s___having its registered office at_____herein after called 'Bidder' wish to participate in the said proposal for RFP 'Establishing and running district level Aadhaar Seva Kendra (ASK)' to UIDAI having its office at Bangla Sahib Road, Behind Kali Mandir, Gole Market, New Delhi – 110001. An irrevocable Financial Bank Guarantee (issued by a scheduled commercial Bank <name of bank>) against Earnest Money Deposit amounting to Rupees 60 Crore (Rupees Sixty Crore only) valid upto___is required to be submitted by the Bidder, as a condition for participation in the said bid, which amount is liable to be forfeited on happening of any contingencies mentioned in the proposal document.

M/s ___having its registered office at___has undertaken in pursuance of their offer to UIDAI (hereinafter called as the beneficiary) dated_____has expressed its intention to participate in the said proposal and in terms thereof has approached us and requested us <Name of issuing Bank>_____Bank<Address/Branch name>_____to issue an irrevocable financial Bank Guarantee against Earnest Money Deposit amounting to Rupees_valid upto_____.

We, the Bank at _____having our Head office at_____therefore Guarantee and undertake to pay immediately on first written demand by UIDAI the amount of Rupees___ Rupees_____ _____without any reservation, protest, demur and recourse in case the Bidder fails to comply with any condition of the proposal or any default in violation against the terms of the bid, without the beneficiary needing to prove or demonstrate reasons for its such demand. Any such demand made by said beneficiary shall be conclusive and binding on us irrespective of any dispute or difference raised by the Bidder. This guarantee shall be irrevocable and shall remain valid upto__.

Signed, sealed and delivered by Mr. ……

For and on behalf of the Guarantor to do so and to affix the seal of AIC, in the presence of

| | |
|---|---|
| Office Seal:<br><br>Place<br><br>Date | (Authorized Signatory)<br><br>Name<br><br>Designation<br><br>Mobile Number |

## 8.12 ANNEXURE-XII: Format for Performance Bank Guarantee

**(To be stamped in accordance with stamp act. The non-judicial stamp paper should be in the name of issuing Bank)**

Reference No.: _
No: ___
Date: DD/MM/YYYY Bank Guarantee

To,

Unique Identification Authority of India (UIDAI)
Bangla Sahib Road, Behind Kali Mandir,
Gole Market,
New Delhi – 110001

In consideration of the Unique Identification Authority of India, Ministry of Electronics & Information Technology, Government of India (hereinafter referred to as the "Owner" which expression shall unless repugnant to the context or meaning thereof include its successors, administrators and assigns) having awarded to M/s ..... with its Registered/Head office at (herein after referred to as the "Contractor" which expression shall unless repugnant to the context or meaning thereof, include its successors, administrators, executors and assigns), a Contract by issue of Notification of award No……..dated……..and the same having been acknowledged by the Contractor, resulting in a Contract, bearing No……..dated……valued at for"[RFP 'Establishing and running district level Aadhaar Seva Kendra (ASK)'" in UIDAI]" and the Contractor having agreed to provide a Contract Performance Guarantee for the faithful performance of the entire Contract not exceeding INR (in words & figures).

We (Name & Address of Bank Branch) having its Head office at……(hereinafter referred to as the "Bank", which expression shall, unless repugnant to the context or meaning thereof, include its successors, administrators, executors and assigns) do hereby guarantee and undertake to pay the amounts due and payable under this guarantee without any demur, reservation, context, recourse or protest and/or without any reference to the Contractor merely on a demand from the Owner stating that the amount claimed is due by way of loss or damage caused to or would be caused to or suffered by the Owner by reason of breach by the said Contractor(s) of any of the terms or conditions contained in the said Agreement or by reason of the Contractor(s) failure to perform the said Agreement. Any such demand made on the Bank shall be conclusive and binding not withstanding any difference between the Owner and the Contractor or any dispute pending before any Court, Tribunal, Arbitrator or any other authority. We agree that the guarantee herein contained shall be irrevocable and shall continue to be enforceable till the Owner discharges this guarantee.

The Owner shall have the fullest liberty without affecting in any way the liability of the Bank under this guarantee, from time to time to extent the time for performance of the Contract by the Contractor. The Owner shall have the fullest liberty, without affecting this guarantee, to postpone from time to time the exercise of any powers vested in them or of any right which they might have against the Contractor, and to exercise the same at any time in any manner, and either to enforce or to forbear to enforce any covenants, contained or

implied, in the Contract between the Owner and the Contractor or any other course or remedy or security available to the Owner. The Bank shall not be released of its obligations under these presents by any exercise by the Owner of its liberty with reference to the matters aforesaid or any of them or by reason of any other act of omission or commission on the part of the Owner or any other indulgences shown by the Owner or by any other matter or thing whatsoever which under law would, but for this provision have the effect of relieving the Bank.

The Bank also agrees that the Owner at its option shall be entitled to enforce this Guarantee against the Bank as a principal debtor, in the first instance without proceeding against the Contractor and notwithstanding any security or other guarantee the Owner may have in relation to the Contractor's liabilities.

This guarantee will not be discharged due to the change in the constitution of the Bank or the Contractor(s)/Service Provider(s).

Notwithstanding anything contained herein above:

a) Our liability under this guarantee is restricted to.....(INR ).
b) This Bank Guarantee will be valid upto ; and
c) We are liable to pay the guarantee amount or any part thereof under this Bank Guarantee only upon service of a written claim or demand by owner on or before ……..

In witness where of the Bank, through its authorized officer, has set its hand and stamp on this day of…….. 20XX…….at……Dated …… this……..day 20XX.

WITNESS

_____

_____

Signature

WITNESS

_____

_____

Signature

Yours faithfully,
For and on behalf of the Bank,
(Signature) Designation Stamp of Bank
(Address of the Bank)

## 8.13 ANNEXURE-XIII: UIDAI Information Security Guidelines

**(Guidelines for Third party Service Provider)**

All relevant segments of the Information security guidelines shall be applicable to Service Provider are as below: -

8.13.1 Human Resources

8.13.1.a The Service Provider shall appoint a SPOC for all information security related activities and communications with UIDAI.

8.13.1.b Service Provider support personnel shall provide the information regarding the background such as address Check, identity check, education, criminal record, employment history; police verification etc. of all the resources deployed in the project including support staff and provides a self-declaration that the information provided is correct. UIDAI or agency appointed by UIDAI may validate this information during or after the employment of the respective personnel;

8.13.1.c Formal on-boarding and off-boarding process shall be followed for all Service Provider personnel;

8.13.1.d All Service Provider employees handling UIDAI information assets shall adhere to the following information security requirements:

8.13.1.d.i Accept their compliance to the security responsibilities communicated by UIDAI;

8.13.1.d.ii Sign a confidentiality (non-disclosure) agreement issued by UIDAI in addition to the contractual requirements. This could be done through a self-declaration document;

8.13.1.d.iii Complete the functional training provided by the UIDAI prior to handling UIDAI information assets.

8.13.1.d.iv Complete the security awareness training as a part of the Service Provider on-boarding process. Training should cover social engineering, social media and other themes as per the current security threats;

8.13.1.d.v Complete all recurring information security awareness trainings provided by UIDAI;

8.13.1.d.vi Be aware of UIDAI disciplinary process in the event of an information security breach.

8.13.2 Asset Management

8.13.2.a All assets used by the Service Provider (business applications, operating systems, databases, network etc.) for the purpose of delivering services to UIDAI shall be identified. Details of the information asset shall be recorded in an information asset register and provided to UIDAI. The Agency shall keep the register up to date. UIDAI may withhold the 10% payment in case of any such breach of same or may impose a SLA of Rs. 10,000 per such violation.

8.13.2.b The assets shall be labeled and secured based on the information asset classification guidelines issued by UIDAI from the time it is created until the time it is destroyed or disposed;

8.13.2.c Service Provider shall obtain the approval from UIDAI – Head Information Security for the use of removable media for business purposes;

8.13.2.d Service Provider shall not transfer any personal identifiable information (PII) from removable media to any personal device;

8.13.2.e Media containing critical and sensitive information shall be disposed-off in a secure manner as per UIDAI media disposal procedure;

8.13.2.f Disposal of media/information shall be done by authorized users under supervision and a record shall be maintained. The contents of any re-usable media that are to be removed shall be erased or destroyed physically to prevent reuse.

8.13.3 Access Control

8.13.3.a Only authorized individuals shall be provided access to information facilities processing UIDAI information;

8.13.3.b Service Provider operators shall access all desktops / laptops/ workstations and printers used to process UIDAI information through their unique user IDs and passwords;

8.13.3.c The SFTP client shall be accessed through the unique user ID and password provided by UIDAI to the authorized personnel of the Service Provider. The "One Time Password" (OTP) received on the registered mobile number of the authorized Service Provider personnel shall be used to complete the dual authentication process;

8.13.3.d Service personnel shall select passwords as per UIDAI password policy (as shared from time to time);

8.13.3.e Service Provider personnel with access to UIDAI information assets shall:

8.13.3.e.i Have least privilege access for information access and processing;

8.13.3.e.ii Should use passwords as per UIDAI password policy (as shared from time to time);

8.13.3.e.iii c. Keep their user Ids and corresponding passwords confidential and refrain from sharing the with others;

8.13.3.e.iv Change their passwords whenever there is any indication of a possible compromise of the system or password;

8.13.3.e.v Terminate active sessions when finished or implement an equipment locking mechanism;

8.13.3.e.vi Logout from the workstation, servers and/ or network device when the session is finished;

8.13.3.e.vii Default user credentials or administrative passwords for information devices shall be changed and securely stored in a fire proof safe, which shall been closed in an envelope with an authorized signature and date.

8.13.3.f Procedures shall be put in place for secure storage and management of administrative passwords for critical information systems;

8.13.3.g Access rights and privileges to information processing facilities for UIDAI information shall be revoked within 24 hours (Business hours) of separation of respective personnel having access to such information;

8.13.3.h Post deactivation, user IDs shall be deleted if not in use as per Exit formalities;

8.13.3.i Access rights and privileges to information facilities processing UIDAI information shall be reviewed on a quarterly basis and the report shall be maintained for audit purposes;

8.13.3.j Common user IDs / group user IDs shall not be used. Exceptions shall be approved and documented where there is no alternative;

8.13.3.k Default user credentials or administrative passwords for information devices shall be changed and securely stored in a fireproof safe enclosed in an envelope with authorized signature and date;

8.13.3.l Access to administrative password or critical information systems password shall be controlled with an access log register (physical document register is maintained within the fire proof safe).

Password Policy

8.13.3.m Passwords shall be kept confidential;

8.13.3.n Change the initial passwords provided by service engineers immediately;

8.13.3.o Avoid keeping a paper record of passwords, unless this can be stored securely;

8.13.3.p Change passwords whenever there is any indication of possible system or password compromise;

8.13.3.q Select quality passwords (wherever applicable/enforced) with a minimum length of characters, which are:

8.13.3.q.i Easy to remember;

8.13.3.q.ii Not based on anything somebody else could easily guess or obtain using person related information, e.g., names, telephone numbers, and dates of birth etc.;

8.13.3.q.iii Free of consecutive identical characters or all-numeric or all-alphabetical groups;

8.13.3.q.iv Password should contain at least one numeric and one special character if the system supports.

8.13.3.r Change passwords at regular intervals (passwords for privileged accounts shall be changed more frequently than normal passwords) and avoid re-using or cycling old passwords;

8.13.3.s Change temporary passwords at the first log-on;

8.13.3.t Not include passwords in any automated log-on process, e.g., stored in a macro or function key;

8.13.3.u Not share individual user passwords;

8.13.3.v Three successive login failures should result in a user's account being locked; they should not be able to login until their account is unlocked and the password reset.

The user should contact the System Engineers/Administrators for getting the account unlocked;

8.13.3.w The local security settings on all the systems shall be aligned and synced with the Active Directory Settings. The users shall not be provided access to modify the local security settings on the individual systems. In the case of administrative access being provided, the users shall be prohibited from modifying the local security settings. Modifying the same shall result in disciplinary action.

8.13.4 Physical and Environmental Security

8.13.4.a Service Provider premises shall be located in a secure environment;

8.13.4.b External walls of the premises shall be of solid construction and all external doors shall be suitably protected through control mechanisms like bars, locks, security guards etc.;

8.13.4.c Service Provider production and storage facilities shall be physically secured employing a combination of physical security measures such as CCTV cameras, locked cabinets, alarm systems etc.;

8.13.4.d Only authorized Service Provider personnel shall be allowed to enter the premises hosting UIDAI resident information printing facilities;

8.13.4.e Intruder detection systems shall be installed and regularly tested to cover external doors and accessible windows;

8.13.4.f Service Provider personnel shall not carry personal information processing devices such as laptops, palmtops, cameras and media devices like tapes, CDs, USB drives etc.;

8.13.4.g Visitors' entry into Service Provider premises shall be restricted. Security validations and checks such as verifying the identity of the visitor, checking the belongings and bags, and making physical entry in registers shall be carried out;

8.13.4.h All visitors carrying Information Processing Equipment (such as Laptops, Palmtops, Personal Digital Assistant) or Media (such as CDs, Tapes, DATs), shall be asked to declare such assets and the same shall be recorded in a register at the security gate;

8.13.4.i Imaging devices such as mobile phones, laptops, cameras etc. shall not be permitted within the facility;

8.13.4.j Visitor badges/ tokens shall be issued to all visitors to the Service Provider office;

8.13.4.k Entry and exit along with date and time and the purpose of visit of visitors shall be recorded in a visitor's register maintained at the entrance gates;

8.13.4.l Visitors shall be escorted by authorized personnel to enter critical information processing areas and access logs shall be maintained for audit purposes;

8.13.4.m Lockable cabinets or safes shall be provided in the offices, rooms and information processing facilities;

8.13.4.n Fire doors and extinguishing systems shall be deployed, labeled, monitored, and tested regularly;

8.13.4.o Physical access to restricted areas or offices and facilities hosting critical equipment shall be pre-approved and recorded along with the date, time and purpose of entry;

8.13.4.p Signs or notices legibly setting forth the designation of restricted areas and provisions of entry shall be posted at all entrances and at other points along the restricted areas as necessary;

8.13.4.q Reception areas shall be manned by a receptionist(s) and/ or security guard(s) during Service Provider office hours;

8.13.4.r All Service Provider office locations processing UIDAI information shall implement controls to protect the information assets and facilities hosting information against damage from environmental threats like fire, flood, earthquake & terrorist attacks, explosion, civil unrest and other forms of manmade/ natural threats;

8.13.4.s Complete facility shall be under CCTV coverage and Service Provider will create facilities for its central monitoring including by UIDAI officials over internet.

8.13.4.t The recordings of the CCTV shall be stored with the Service Provider for a minimum period of 6months.

8.13.4.u The movement of all incoming and outgoing items shall be documented;

8.13.4.v All equipment shall be protected from power failures and other disruptions caused by failures in supporting infrastructure;

8.13.4.w Controls shall be designed and implemented to protect power and network cables from unauthorized interception or damage;

8.13.4.x Information systems containing UIDAI information shall be disposed-off securely only after obtaining approval from UIDAI authorized personnel;

8.13.4.y Before sending any equipment out for repair, the equipment shall be sanitized to ensure that it does not contain any UIDAI sensitive data.

8.13.4.z All SERVICE PROVIDER personnel accessing UIDAI information assets shall be made aware of UIDAI information security policies and controls for protecting unattended equipment;

8.13.4.aa A clear desk and clear screen policy for UIDAI information processing facilities shall be adopted to reduce risks of unauthorized access and loss of and damage to information. Following shall been sured:

8.13.4.aa.i Paper and computer media shall be stored in locked cabinets and/or secure enclosures when not inuse;

8.13.4.aa.ii Restricted and Confidential information and storage media shall be locked away when not required especially during non-business hours;

8.13.4.aa.iii Screen savers or related technological controls shall be implemented to lock the screen of the information systems when unattended beyond a specified duration;

8.13.4.aa.iv Incoming and outgoing mail points and unattended fax and telex machines shall be protected from unauthorized access during off-office hours;

8.13.4.aa.v Printed copies shall be secured;

8.13.4.aa.vi Unused paper documents and printed papers shall be shredded.

8.13.5 Operations Security

8.13.5.a Service Provider shall ensure that systems are placed in secured areas and access to the systems is restricted only to authorized personnel;

8.13.5.b Operators shall log-in to the SFTP client using their unique user id and password;

8.13.5.c Service Provider shall ensure transmission security of jobs;

8.13.5.d The private key corresponding to the public key, bound to the digital certificate of the Service Provider which is used for decryption of XML files shall be adequately protected from unauthorized access;

8.13.5.e The firmware of the all IT system shall be updated with the latest security patches as and when they become publicly available;

8.13.5.f Any abnormality shall be investigated and reported to Head Information Security, UIDAI;

8.13.5.g All invoices raised by the SERVICE PROVIDER shall be accompanied by a certificate stating that the SERVICE PROVIDER is not in possession of any data pertaining to all residents.

8.13.5.h Accountability and tracking procedures shall be adhered to during all phase's activities.

8.13.5.i Service Provider shall maintain an MIS of the operations and share the same with UIDAI on a periodic basis for the purpose of tracking and reconciliation.

8.13.6 System Operation Security

8.13.6.a All systems that connect to CIDR or handle the residents' personal data shall be secured using endpoint security solutions. At the minimum, anti-virus / malware detection software shall be installed on such systems;

8.13.6.b Safeguards shall be implemented in the information systems to prevent the execution of malware;

8.13.6.c Standard Operating Procedure (SOP) shall be developed for all information systems and services related to UIDAI operations. The SOP shall include the necessary activities to be carried out for the operation and maintenance of the system or service and the actions to be taken in the event of a failure;

8.13.6.d All changes to information systems and facilities processing UIDAI information shall be done according to the PSPs change management process. The same shall be notified to UIDAI;

8.13.6.e A record of all changes shall be maintained and provided to relevant stakeholders as and when required;

8.13.6.f The Operating System as well as the SFTP client program shall be updated with the latest security patches as and when they become publicly available;

8.13.6.g Any changes to the operating procedure shall be notified to UIDAI. A record of all changes shall be maintained and provided to relevant stakeholders as and when required;

8.13.6.h Event logs recording the critical user-activities, exceptions and security events shall be enabled and stored to assist in future investigations and access control monitoring;

8.13.6.i Regular monitoring of the audit logs shall take place and results shall be recorded;

8.13.6.j Logs shall be monitored and analyzed for any possible unauthorized use of information systems;

8.13.6.k Audit logs shall capture details like User IDs, Date and time of log-on and log-off, Terminal identity or location, if possible, Records of successful and rejected system access attempts, records of successful and rejected data and other resource access attempts, time stamp of event, source IP, details of Port used etc.

8.13.6.l Access to audit trails and event logs shall be provided to authorized personnel only;

8.13.6.m Logs shall be protected from unauthorized access or deletion;

8.13.6.n All computer clocks shall be set to an agreed standard and checked to make corrections to any significant variations observed;

8.13.6.o The date and time settings of the critical servers and network devices shall be synchronized with a centralized in-house solution or NTP aligned with the relevant time zone;

8.13.6.p Third-party independent network, operating system, database and application assessment and configuration reviews shall be carried out annually and/or during a significant change in the Service Provider ecosystem;

8.13.7 Communications Security

8.13.7.a The network between CIDR and Service Provider shall be secure. Service Provider shall connect with CIDR through leased lines or similar secure private lines;

8.13.7.b Service Provider shall ensure that the SFTP client server is dedicated for the UIDAI activities and is not used for any other activities of the Service Provider;

8.13.7.c The SFTP client server shall be hosted behind a firewall. The firewall rules shall restrict any incoming access requests to the SFTP client server;

8.13.7.d The SFTP client host shall reside in a segregated network segment that is isolated from the rest of the network of the Service Provider with the exception of the network segments which are authorized;

8.13.7.e Passwords used for SFTP access as well as the passwords of the underlying Operating System of the client host shall be consistent with UIDAI password management policy (as shared from time to time);

8.13.7.f All unwanted network services (such as FTP or Telnet) offered by the printers should be turned off to reduce the attack surface exposed by the devices;

8.13.7.g All network accessible services offered by the printer shall be protected using passwords that are consistent with the UIDAI password policy (as shared from time to time);

8.13.7.h Special consideration shall be given to Wireless networks due to poorly defined network perimeter. Appropriate authentication, encryption and user level

network access control technologies shall be implemented to secure access to the network;

8.13.7.i Where the mobile device policy allows the use of privately owned devices (e.g., Bring Your Own Device – BYOD), the related security measures should also consider:

8.13.7.i.i Separation of private and business use of the devices, including using software to support such separation and protect business data on a private device;

8.13.7.i.ii Providing access to business information only after users have signed an end user agreement acknowledging their duties (physical protection, software updating, etc.), waiving ownership of business data, and allowing remote wiping of data by the organization in case of theft or loss of the device or when no longer authorized to use the device. The policy and measures need to take into account the privacy legislation.

8.13.7.j Systems processing UIDAI information files shall automatically log out the operator and lock itself after a period of inactivity;

8.13.7.k Service Provider e-mail accounts shall not be configured on systems processing UIDAI XML files.

8.13.8 Service Provider Centres

8.13.8.a The network between CIDR and Service Provider shall be secure. Service Provider shall connect with CIDR through secure leased line connectivity;

8.13.8.b Systems used by centre personnel shall be dedicated to UIDAI activities and not be used for other clients / activities of the contact centre;

8.13.8.c Passwords of the underlying Operating System of the client host shall be consistent with UIDAI password management policy (as shared from time to time);

8.13.8.d Systems accessing CIDR database shall automatically log out the operator and lock itself after a period of in activity;

8.13.8.e Users shall not use any unauthorized web-mail services or portals.

8.13.9 Information Security Incident Management

8.13.9.a Service Provider shall be responsible for reporting any security weaknesses, any incidents, possible misuse or violation of any of the stipulated guidelines to UIDAI – Head Information Security;

8.13.9.b Monthly security reports shall be sent to UIDAI for tracking and review of security weakness, incidents and violation to validate the closure status;

8.13.9.c Loss / theft of partially finished / finished products shall be reported to the local law enforcement agency and UIDAI within 24hours.

8.13.10 Compliance

8.13.10.a Service Provider shall comply with all terms and conditions outlined in UIDAI Service Provider agreement;

8.13.10.b UIDAI shall reserve right to audit systems and processes of the Service Provider on an annual basis and /or need basis to ensure compliance with stipulated

security policy published time to time, but not limited to this document. The audit plan shall include information security and technical testing controls required to protect UIDAI information assets. UIDAI shall share the findings of the audit with the Service Provider;

8.13.10.c If any non-compliance is found as a result of the audit, the Service Provider shall:

8.13.10.c.i Determine the causes of the non-compliance;

8.13.10.c.ii Evaluate the need for actions to avoid recurrence of the same;

8.13.10.c.iii Determine and implement corrective action;

8.13.10.c.iv Review the corrective action taken.

8.13.10.d Service Provider shall use only licensed software within UIDAI network environment. Record of all software licenses shall be kept and updated regularly;

8.13.10.e Service Provider shall follow information security industry best practices as per International standards like ISO27001: 2013 to maintain information security posture;

8.13.10.f Service Provider and their partners shall ensure compliance to IT Act 2000 and 2008 amendments.

8.13.11 Change Management

8.13.11.a Service Provider shall document all changes to UIDAI Information Processing facilities/ Infrastructure/processes;

8.13.11.b All Changes shall be approved by UIDAI management before being implemented; Change log/ register shall be maintained for all changes performed.

Yours faithfully, Name:
Designation:
Time:
Seal:
Business Address:
…….. (Signature)

## 8.14 ANNEXURE-XIV: SEATING LAYOUT- MODEL (A, B & C)

**Indicative Model-A**

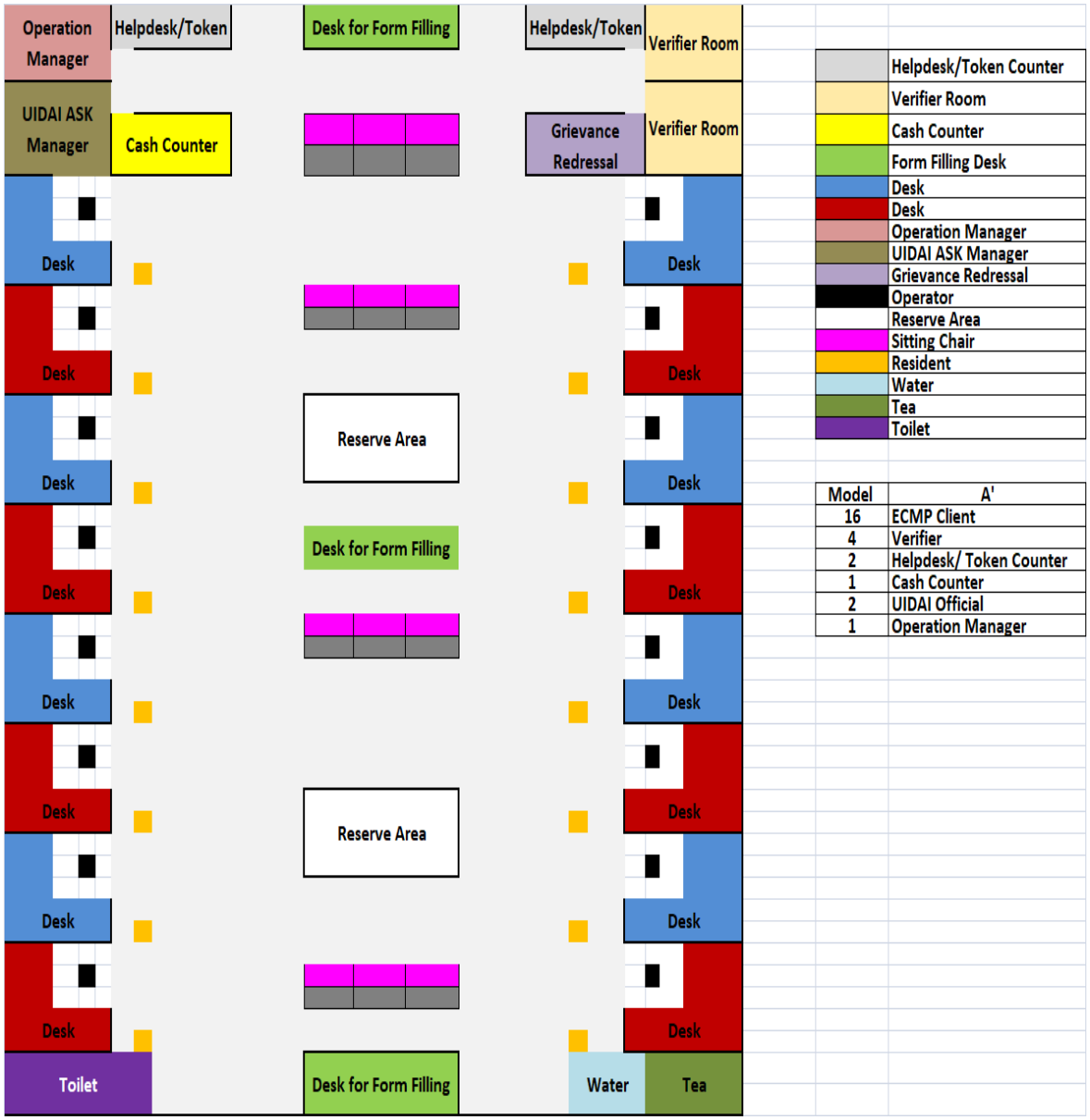

**Indicative Model-B**

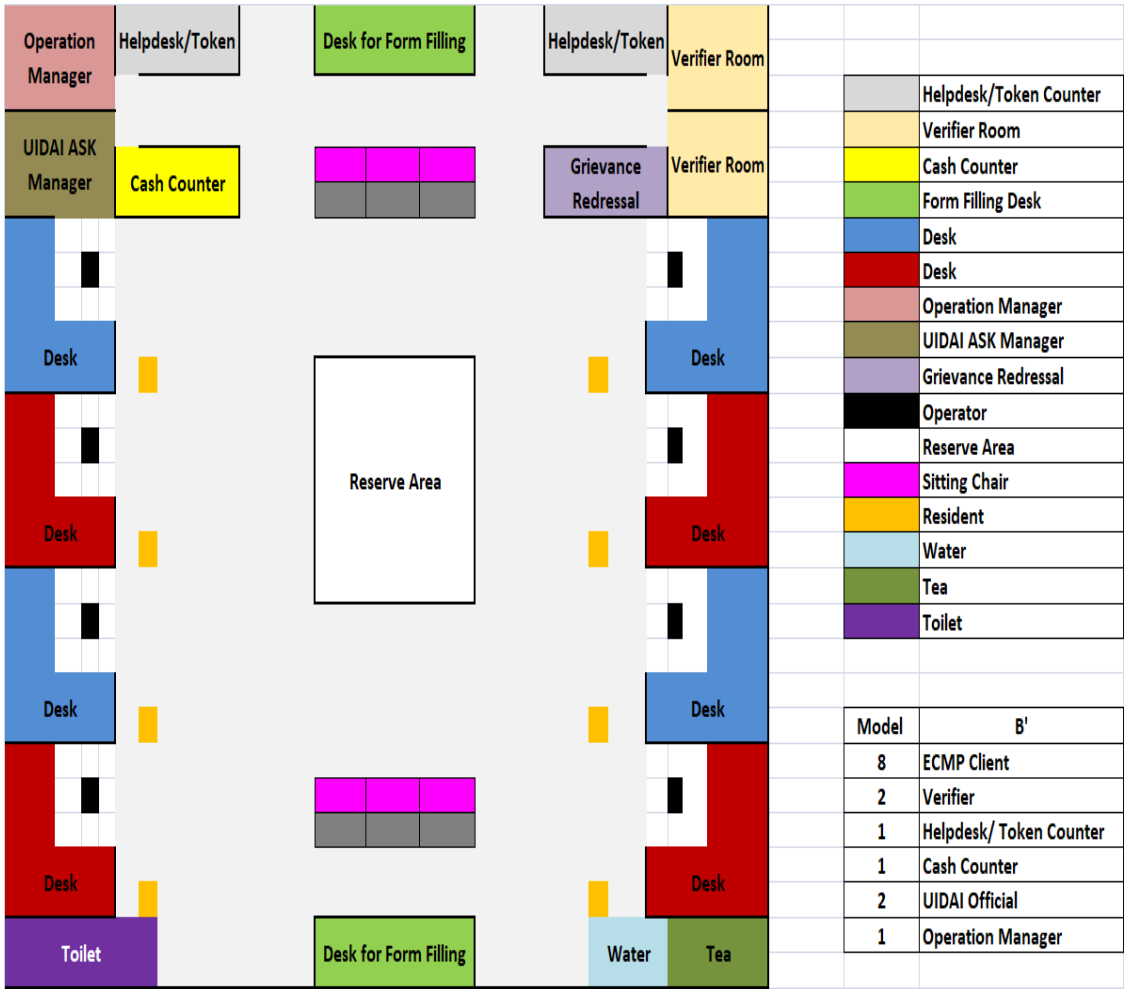


| Model | B' |
|---|---|
| 8 | ECMP Client |
| 2 | Verifier |
| 1 | Helpdesk/ Token Counter |
| 1 | Cash Counter |
| 2 | UIDAI Official |
| 1 | Operation Manager |

## Indicative Model-C

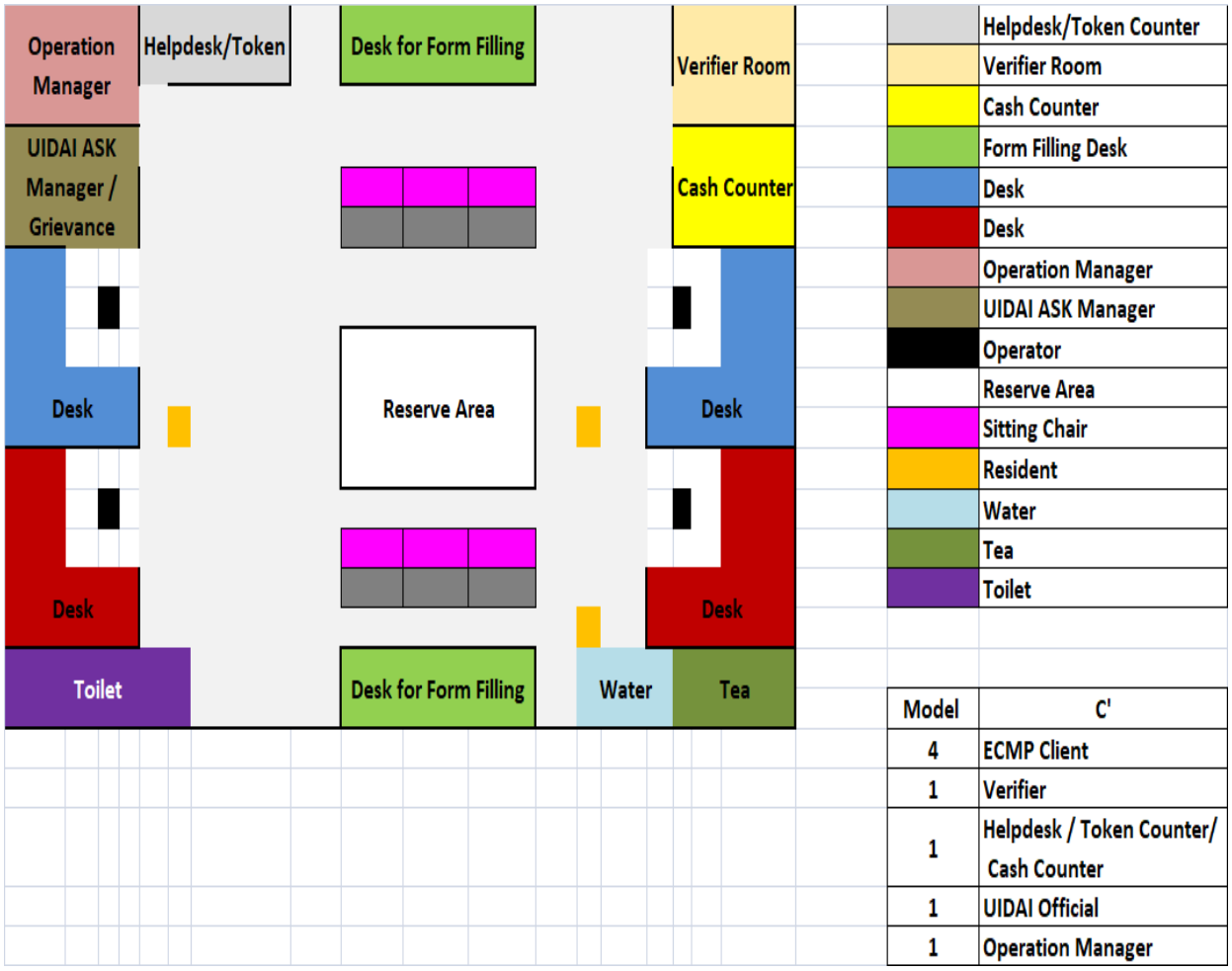


| Model | C' |
|---|---|
| 4 | ECMP Client |
| 1 | Verifier |
| 1 | Helpdesk / Token Counter/ Cash Counter |
| 1 | UIDAI Official |
| 1 | Operation Manager |

## 8.15 Annexure-XV: Process Flow Diagram

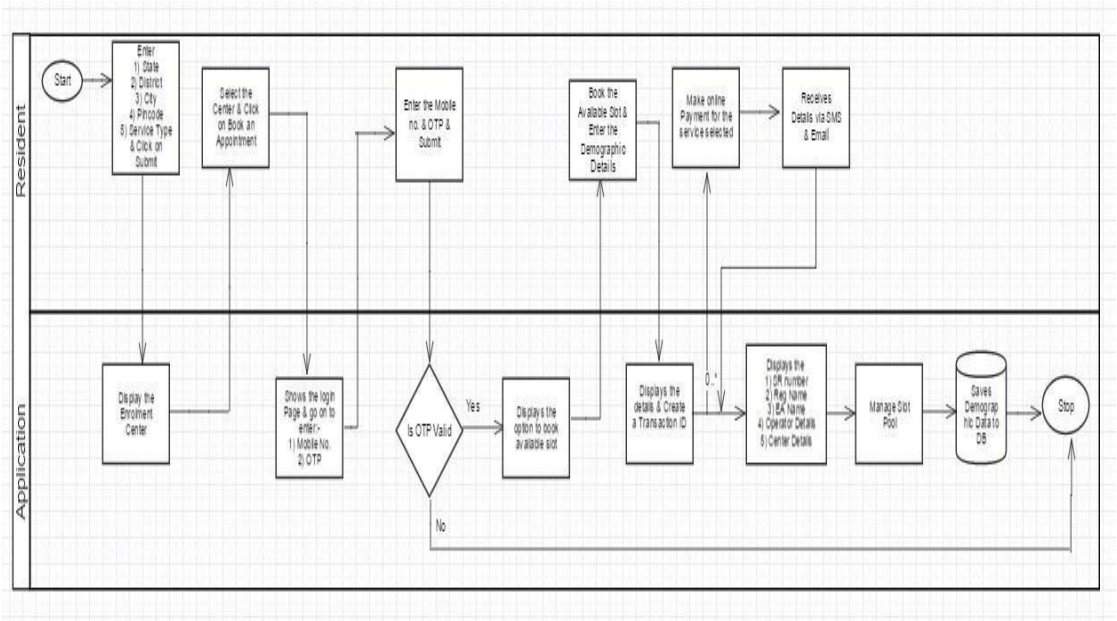

## 8.16 ANNEXURE-XVI: Non-Disclosure Agreement

Non-Disclosure Declaration/Agreement
(to be submitted along with Master Service Agreement at the time of signing contract)

(To be provided on non-judicial stamp paper of Rs.100/-)

WHEREAS,
the undersigned …….. ,Company, _____, having principal place of business/ registered office at….., _____, are desirous of bidding for Bid No…… _____ covering ""_____ _____[RFP Name]" (hereinafter called the said 'RFP'), issued by Unique Identification Authority of India, having its office at UIDAI HO, Bangla Sahib Road, Behind Kali Mandir, Gole Market, New Delhi- – 110001, (hereinafter referred to as 'Purchaser'

FURTHER WHEREAS, that the Company is aware that during the bidding process and thereafter, the Purchaser may disclose certain information/ documents which is privileged and strictly confidential and/or proprietary to the Company or the Service Provider (the selected bidder).

NOW THEREFORE,
in consideration of disclosure of such confidential information, and in order to ensure the Purchaser's grant to the Company/ Service Provider of specific access to Purchaser's confidential information, property, information systems, network, databases and other data, the Parties agrees to all of the following conditions.

It is hereby agreed as under:
The confidential information to be disclosed by the Purchaser under this Declaration ("Confidential Information") shall include without limitation, any and all information in written, representational, electronic, verbal or other form relating directly or indirectly to processes, methodologies, algorithms, risk matrices, thresholds, parameters, reports, deliverables, work products, specifications, architecture, project information, money laundering typologies, related computer programs, systems, trend Confidential Property of UIDAI Page 117 of 143 UIDAI: RFP for Engagement of Service Provider analysis, risk plans, strategies and information communicated or obtained through meetings, documents, correspondence or inspection of tangible items, facilities or inspection at any site to which access is permitted by the Purchaser to the Company/ Service Provider. This NDA will be binding on the Service Provider / Company through-out the bidding process and the duration of the Contract, in case they are selected as a successful 'Service Provider.

1. Confidential Information does not include information which:
    a. is already known or had in its possession, prior to disclosure, without limitation on its confidentiality;
    b. information in the public domain as a matter of law;
    c. is obtained by the Bidder from a third party without any obligation of confidentiality; is required to disclose by order of a competent court or regulatory authority; and
    d. is released from confidentiality obligations, with the written consent of the Purchaser.
    e. The Company/ Service Provider shall have the burden of proving for the exemption of the confidentiality obligations.

2. The Company/ Service Provider agrees to hold in trust any Confidential Information received by the Company/ Service Provider, as part of the bidding process or otherwise, and the Company/ Service Provider shall maintain strict confidentiality in respect of such Confidential Information, and in no event a degree of confidentiality less than the Company/ Service Provider uses to protect its own confidential and proprietary information. The Company/ Service Provider also agrees:
    a. to maintain and use the Confidential Information only for the purposes of bidding for this RFP and thereafter only as expressly permitted herein;
    b. to only make copies as specifically authorized by the prior written consent of the Purchaser and with the same confidential or proprietary notices as may be printed or displayed on the original;
    c. to restrict access and disclosure of Confidential Information to their employees, agents, and representatives strictly on a "need to know" basis, to maintain Confidential Property of UIDAI Page 118 of 143 UIDAI: RFP for Engagement of Service Provider confidentiality of the Confidential Information disclosed to them in accordance with this clause; and
    d. to treat Confidential Information as confidential unless and until Purchaser expressly notifies the Company/ Service Provider of release of its obligations in relation to the said Confidential Information.
3. Notwithstanding the foregoing, the Company/ Service Provider acknowledges that the nature of activities to be performed as part of the bidding process or thereafter may require the Company/ Service Provider's personnel to be present on premises of the Purchaser or may require the Company/ Service Provider's personnel to have access to software, hardware, computer networks, databases, documents and storage media of the Purchaser while on or off premises of the Purchaser. It is understood that it would be impractical for the Purchaser to monitor all information made available to the Company/ Service Provider's personnel under such circumstances and to provide notice to the Company/ Service Provider of the confidentiality of all such information.
4. Therefore, the Company/ Service Provider shall disclose or allow access to the Confidential Information only to those personnel of the Company/ Service Provider who need to know it for the proper performance of their duties in relation to this project, and then only to the extent reasonably necessary. The Company/ Service Provider will take appropriate steps to ensure that all personnel to whom access to the Confidential Information is given are aware of the Company/ Service Provider's confidentiality obligation. Further, the Company/ Service Provider shall procure that all personnel of the Company/ Service Provider are bound by confidentiality obligation in relation to all proprietary and Confidential Information received by them which is no less onerous than the confidentiality obligation under this agreement.
5. The Company/ Service Provider shall establish and maintain appropriate security measures to provide for the safe custody of the Confidential Information and to prevent unauthorized access to it.

6. Confidential Information shall at all times remain the sole and exclusive property of the Purchaser. Upon completion of the bidding process and/or termination of the Contract or at any time during its currency, at the request of the Purchaser, the Service Provider shall promptly deliver to the Purchaser the Confidential Information and copies thereof in its possession or under its direct or indirect control, and shall destroy all memoranda, notes and other writings prepared by the Company/ Service Provider or its Affiliates or directors, officers, employees or advisors based on the Confidential Information within a period of sixty days from the date of receipt of notice, or destroyed, if incapable of return. The destruction shall be witnessed and so recorded, in writing, by an authorized representative of the Purchaser. Without prejudice to the above the Company/ Service Provider shall promptly certify to the Purchaser, due and Confidential Property of UIDAI Page 119 of 143 UIDAI: RFP for Engagement of Service Provider complete destruction and return. Nothing contained herein shall in any manner impair rights of the Purchaser in respect of the Confidential Information.
7. In the event that the Company/ Service Provider hereto becomes legally compelled to disclose any Confidential Information, the Company/ Service Provider shall give sufficient notice and render best effort assistance to the Purchaser to enable the Purchaser to prevent or minimize to the extent possible, such disclosure. Company/ Service Provider shall not disclose to a third party any Confidential Information or the contents of this RFP without the prior written consent of the Purchaser. The obligations of this Clause shall be satisfied by handling Confidential Information with the same degree of care, which the Company/ Service Provider applies to its own similar Confidential Information but in no event less than reasonable care.
8. The Company/ Service Provider agrees to indemnify the Purchaser against any and all losses, damages, claims, or expenses incurred or suffered by the Purchaser as a result of the Company/ Service Provider's breach of this Agreement.
9. Governing Law – This NDA shall be interpreted in accordance with and governed by the substantive and procedural laws of India and the Parties hereby consent to the exclusive jurisdiction of Courts and /or Forums situated at New Delhi, India only. All disputes under this NDA shall be resolved amicably within 30 days, failing which; the Parties shall refer the dispute, to arbitration, in accordance with the Arbitration and Conciliation Act, 1996. The Parties shall endeavour to appoint a sole arbitrator with mutual consent. If the Parties do not agree on a sole arbitrator, each Party shall appoint one arbitrator and the two arbitrators shall appoint the third (or presiding) arbitrator. The venue of arbitration proceedings shall be at New Delhi, India. All arbitration proceedings shall be in English. The award shall be final and binding on the Parties.
10. The Company/ Service Provider understands and acknowledges that any disclosure or misappropriation of any of the Confidential Information in violation of this Agreement may cause the Purchaser irreparable damage, the amount of which may be difficult to ascertain and, therefore, agrees that the Purchaser shall have the right to apply to a court of competent jurisdiction for an order restraining any such further disclosure or misappropriation and for

such other relief as the Purchaser shall deem appropriate. Such right of the Purchaser shall be in addition to Remedies otherwise available to the Purchaser at law or in equity.

11. Entire Agreement: This NDA constitutes the entire understanding and agreement of the Parties, and supersedes all previous or contemporaneous agreement or communications, both or a hand written, representations and understandings among the parties with respect to the subject matter hereof.
12. Amendments: No amendment, modification and/or discharge of this shall be valid or binding on the Parties unless made in writing and signed on behalf of each of the Parties by their respective duly authorized officers or representatives.
13. Binding Agreement: This Agreement shall be binding upon and inure to the benefit of the Parties hereto and their respective successors and permitted assigns.
14. Severability: It is the intent of the Parties that in case anyone or more of the provisions contained in this Agreement shall be held to be invalid or unenforceable in any respect, such provision shall be modified to the extent necessary to render it, as modified, valid and enforceable under Applicable Laws, and such invalidity or unenforceability shall not affect the Confidential Property of UIDAI Page 120 of 143 UIDAI: RFP for Engagement of Service Provider other provisions of this Agreement.
15. Waiver: If either Party should waive any breach of any provision of this Agreement, it shall not thereby be deemed to have waived any preceding or succeeding breach of the same or any other provision hereof.
16. Survival: Both parties agree that all their obligations undertaken herein with respect to Confidential Information received pursuant to this Agreement shall survive till perpetuity.
17. IN WITNESS HEREOF, and intending to be legally bound, the parties have executed this Agreement to make it effective from the date and year first written above.

For and on behalf of:
(Service Provider)

Authorized Signatory Office Seal:

Name:
Designation:
Date:
Place:
For and on behalf of:

(UIDAI)
Name:
Designation:
Date:
Place:

:

## 8.17 ANNEXURE- XVII: COMMERCIAL BID FORMAT

**Commercial Quote as per scope of work**

**RFP ReferenceNo. < > dated< >**

| | Col-A | Col-B | Col-C | Col-D | Col-E | Col-F=A*B*C*D*E | Col-G | Col-H=F+G |
|---|---|---|---|---|---|---|---|---|
| **Pricing calculation for quotation on GeM** | | | | | | | | |
| **Sl.no** | **Weighted average price for each Aadhaar transaction to be entered by Bidder in Rs.** | **Per day per Kit Average transactions** | **Total Number of Kits** | **Number of days in a month** | **Number of months** | **Value in Cr.** | **GST @18% in Cr.** | **Final value to be entered by the Bidder on GeM in Cr.** |
| **1** | | **48** | **2668** | **30** | **72** | **₹ 0.00** | **₹ 0.00** | **₹ 0.00** |

**Note :**

**1. Bidders are requested to input their quote as a single Weighted average price for each Aadhaar transaction[Enrolment, Biometric Update (with or without demographic update), Demographic Update and Document only update] in "Col-A" , all other fields are non-editable.**
**2. Bidders shall fill in their rates other than zero value in the specified cells without keeping it blank.**
**3. Bidders are requested to enter their input in whole number only.**
**4. Excel sheet will automatically calculate the final value in "Col-H" for Financial Document Indicating Price Breakup to be entered on GeM portal by the Bidder.**
**5. Bidder should save the excel file in .PDF format and also upload it on GeM for Financial Document Indicating Price Breakup.**
**6. Payment will be made as on actual number and type of sucessful transactions as explained in clause under Section-6: Liquidity Damage, SLA and Payments terms 6.7.1(a) that is "On the basis of "Discovered Rate" Service Provider will be paid 125% of the Discovered Rate for each Enrolment, Biometric Update (with or without demographic update) transaction and 75% of the Discovered Rate for each Demographic Update and Document only update transaction"**

* Evaluation of commercial bid will be done based on the minimum (L1) price quoted by the Bidders

Dated:

(Signature)

(In the capacity of)

Duly authorized to sign the Tender Response for and on behalf of:

(Name and Address of Company)
Seal/Stamp of Bidder

## 8.18 ANNEXURE-XVIII: Roles and Responsibility of ASK Manager

8.18.1 ASK manager will be reporting to Director Regional Office of the respective state and Director E&U1 at Head Office

8.18.2 The working hours of the ASK managers will be as per the working hours of the ASK to which he/she assigned.

8.18.3 All UIDAI holidays of the concerned Region and weekly off of the concerned ASK will be official holidays for the manager. In case of centers having no weekly holidays, Sunday will be weekly holiday for the Manager.

8.18.4 ASK Managers will be entitled for leaves as per NISG policy applicable to resources working with UIDAI.

8.18.5 ASK managers will be eligible for lap top for their official functioning as per the existing UIDAI guidelines for officials recruited through NISG. (UIDAI Region Office may provide laptop to Managers working under its jurisdiction.)

8.18.6 Manage the administrative and operational activities of the respective Aadhaar Seva Kendra. Ensure timely closure of all relevant issues.

8.18.7 Monitor MIS dashboards and increase/decrease counters to maximize output and optimize resident queues in real time Handle grievances with special emphasis on resolving resident issues related to

8.18.8 Appointment booking, Aadhaar enrolment/update process and other Aadhaar Resident services which comes under the domain of ASK

8.18.9 Collaborate with UIDAI (Regional Office, Tech Center and Head Office) and Service Providers for timely closure of resident grievances and technical issues

8.18.10 Liaison with UIDAI, other ASKS and local authorities for taking up new initiatives.

8.18.11 Pursue opportunities to promote the Aadhaar Seva Kendra in the city and the state to facilitate the residents and UIDAI

8.18.12 Maintain employee attendance register and arrange trainings on relevant UIDAI policies, applications and technology.

8.18.13 Organize employee feedback related to ASK operations on periodic basis. Monitor attrition and ensure timely replacement of resources by Service Provider

8.18.14 Collect resident feedback and ensure smooth functioning of the ASK by ensuring service to all residents as per appointment.

8.18.15 Monitor and facilitate weekly/monthly/periodic submission of service summary report to UIDAI

8.18.16 Attend to any other works assigned from time to time by UIDAI

## 8.19 ANNEXURE XIX Format for Change Control Note

| **Change Request Form** | | | | |
|---|---|---|---|---|
| Please attach any paper required to support this Change Request | | | | |
| **RFP Reference:** | | | | |
| **Subject:** | | | | |
| **Change No.** | **Change Requested By** | **Request Date** | **Required by Date** | **Proposed Implementation Date** |
| | | | | |
| **Justification** | **Type of Change:** | | | |
| | *[mention here]* | | | |
| | **Requested Change:** | | | |
| | *[mention here]* | | | |
| | **Reason for Change:** | | | |
| | *[mention here]* | | | |
| **Change Request Classification** | | | | |
| **Priority: (Choose P1 to P5)** | | Severity: | Category: | |
| | | Major: | | |
| | | Significant: | Application: | |
| | | Minor: | Others: | |
| | | Low: | Details (if any): | |
| **Area** | | **Impact of Proposed Changes** | | |
| | | Note: If possible, provide details of impact in terms of days/INR | | |
| **Impact** | **Impact of Finances** | | | |
| | **Impact on Business including risks & issues** | | | |
| | **Impact on Schedule** | **Schedule Date** | | **Proposed New Date** |
| | | | | |
| **Conclusion for consideration of UIDAI:** | | | | |
| **Approval** | | **UIDAI** | **Consultant** | **Comments** |

| | | | |
|---|---|---|---|
| | | | |

## 8.20 ANNEXURE XX Undertaking on Exit Management and Transition

No.

To,
Deputy Director (E&U Division),
Unique Identification Authority of India (UIDAI),
Head Office
Bangla Sahib Road, Near Gole Market
New Delhi – 110001

Dear Sir,
**Sub: Undertaking on Exit Management and Transition**

1. I/We hereby undertake that at the time of completion of our engagement with UIDAI, either at the End of Contract or termination of Contract before planned Contract Period for any reason, we shall successfully carry out the exit management and transition of this Project to UIDAI or to an agency identified by UIDAI to the satisfaction of UIDAI.

2. I/We further undertake to complete the following as part of the Exit management and transition:
   a. We undertake to complete the updation of all Project documents and other artefacts and handover the same to UIDAI before transition.
   b. I/We undertake to design standard operating procedures to manage system (including application and IT systems), document the same and train UIDAI personnel on the same.
   c. If UIDAI decides to take over the operations and maintenance of the Project on its own or identifies or selects any other agency for providing operations and maintenance services on this Project, then we shall provide necessary handholding and transition support, which shall include but not be limited to, conducting detailed walkthrough and demonstrations for the IT applications, handing over all relevant documentation (including all the copies/papers etc), addressing the queries and clarifications of the new agency with respect to the working or performance levels of the applications, conducting training sessions etc.

3. I/We also understand that the Exit management and transition will be considered complete on the basis of approval from UIDAI.

Yours faithfully,
(Signature of the Authorized signatory of the Bidding Organisation)
Name :

Designation :

Date :

Location :

Seal :

Business Address:

## 8.21 ANNEXURE-XXI: List of Deliverables

**List of Deliverables**

| Sl. no | Parameters | Comments |
|---|---|---|
| 1 | ASK Sign Board | |
| 2 | End to end wheel chair friendliness from road/parking | |
| 3 | Constructional readiness of the site with interior finishing/designing as per UIDAI theme | |
| 4 | On-Premise display/branding related to i) Individual Counter labels; ii) Services available; iii) Document list; iv) Pricing; v) Book Appointment; vi) List of holidays and working hours | |
| 5 | Minimum manpower for counter allocation as per contract | |
| 6 | Deployment as per approved layout; Separate entry and exit | |
| 7 | Enrolment Kit installation (as per Model) | |
| 8 | Token/Queue management system readiness (with dry run) | |
| 9 | Generator (atleast 50% Power Backup) + Air conditioning + Online-UPS power backup for Enrolment client | |
| 10 | Tandom SS Chairs as per contract | |
| 11 | Stand with latest Newspaper & Magazine (Eng+Hindi+Local language) | |
| 12 | LED display pannel as per contract with clear visibility from all resident seats | |
| 13 | CCTV Cameras covering the ASK, especially the entry & exit | |
| 14 | Mobile connectivity of all major network service providers | |
| 15 | On-site Payment system: POS machine+UPI+Wallet+Cash (Cash + QR Code) | |
| 16 | Table near helpdesk for paperwork | |
| 17 | RO water cooler with glasses | |
| 18 | Basic Stationery Provision (Pen/Stapler/Paper/Email printing) | |
| 19 | Toilet facility with provision for PH | |
| 20 | Dress code for employee along with ID cards | |
| 21 | Security personnel with a record file to note movement of assets | |
| 22 | Garbage disposal bins | |
| 23 | Fire extinguishers with instructions + Planned exit protocol | |
| 24 | Leased Line connection of requisite bandwidth (10/20Mb) | |
| 25 | Manpower checklist:(i) Certificate for: Graduation + Basic etiquettes and communication skills training + Training on Aadhaar Act, Data Security and Privacy + Background verification with self-declaration (ii) Operator & Supervisor Certificate | |
| 26 | Occupancy certificate & necessary clearances from concerned authority including fire safety, electrical wiring, NOC & lift operations | |
| 27 | Please mention the resident facilities, if available: 1. Provision of Tea/Coffee; 2. Snacks; Counter; 3.Photocopy; 4.Phone on payment basis. | |

## 8.22 ANNEXURE-XXII: List of Existing ASKs

| List of ASKs | | | | List of ASKs | | | |
|---|---|---|---|---|---|---|---|
| **#** | **UIDAI RO** | **State** | **ASK Location** | **#** | **UIDAI RO** | **State** | **ASK Location** |
| 1 | Bangalore | Karnataka | Bengaluru | 45 | Hyderabad | Andhra Pradesh | East Godavari |
| 2 | Bangalore | Karnataka | Davangere | 46 | Hyderabad | Telengana | Hyderabad |
| 3 | Bangalore | Karnataka | Dharwad (Hubli) | 47 | Hyderabad | Andhra Pradesh | Vijaywada |
| 4 | Bangalore | Karnataka | Mysore | 48 | Lucknow | Uttar Pradesh | Gonda |
| 5 | Bangalore | Tamil Nadu | Chennai Center 1 | 49 | Lucknow | Uttar Pradesh | Greater Noida |
| 6 | Bangalore | Karnataka | Mangaluru | 50 | Lucknow | Uttar Pradesh | Meerut |
| 7 | Bangalore | Kerala | Kochi | 51 | Lucknow | Uttar Pradesh | Moradabad |
| 8 | Banglore | Tamil Nadu | Madurai | 52 | Lucknow | Uttar Pradesh | Saharanpur |
| 9 | Bengaluru | Karnataka | Bengaluru | 53 | Lucknow | Uttar Pradesh | Varanasi |
| 10 | Bengaluru | Karnataka | Hubli | 54 | Lucknow | Uttar Pradesh | Agra |
| 11 | Bengaluru | Karnataka | Mysore | 55 | Lucknow | Uttar Pradesh | Ghaziabad |
| 12 | Chandigarh | Jammu & Kashmir | Jammu | 56 | Lucknow | Uttar Pradesh | Gorakhpur |
| 13 | Chandigarh | Punjab | Ludhiana | 57 | Lucknow | Uttar Pradesh | Kanpur |
| 14 | Chandigarh | Jammu & Kashmir | Srinagar | 58 | Lucknow | Uttar Pradesh | Lucknow |
| 15 | Chandigarh | Chandigarh | Chandigarh | 59 | Lucknow | Uttar Pradesh | Allahabad |
| 16 | Chandigarh | Haryana | Hisar | 60 | Mumbai | Maharashtra | Mumbai Center 1 |
| 17 | Chandigarh | Himachal Pradesh | Shimla | 61 | Mumbai | Maharashtra | Nasik |
| 18 | Chandigarh | Punjab | Amritsar | 62 | Mumbai | Gujarat | Surat |
| 19 | Delhi | Madhya Pradesh | Indore | 63 | Mumbai | Maharashtra | Mumbai 3 Thane |
| 20 | Delhi | Rajasthan | Jodhpur | 64 | Mumbai | Maharashtra | Nagpur |
| 21 | Delhi | Rajasthan | Kota | 65 | Mumbai | Gujarat | Ahemdabad |
| 22 | Delhi | Madhya Pradesh | Bhopal | 66 | Mumbai | Gujarat | Surat |
| 23 | Delhi | Uttarakhand | Dehradun | 67 | Mumbai | Daman & Diu | Daman |
| 24 | Delhi | Delhi | Delhi - 1 Akshardham | 68 | Mumbai | Dadra an Naar Haveli | Silvasa |
| 25 | Delhi | Delhi | Delhi - 2 Inderlok | 69 | Mumbai | Gujrat | Ahmedabad |
| 26 | Delhi | Delhi | Delhi - 3 kashmiri gate | 70 | Mumbai | Maharashtra | Aurangabad |
| 27 | Delhi | Rajasthan | Jaipur | 71 | Mumbai | Maharashtra | Mumbai 2 |
| 28 | Delhi | Madhya Pradesh | Bhopal | 72 | Ranchi | Bihar | Bhagalpur |
| 29 | Delhi | Uttarakhand | Dehradun | 73 | Ranchi | West Bengal | Cooch Behar |
| 30 | Delhi | Delhi | Delhi - Mohan estate | 74 | Ranchi | Jharkhand | Dhanbad |
| 31 | Delhi | Delhi | Dhaulakuan | 75 | Ranchi | West Bengal | Kolkata 2 - Howrah |
| 32 | Guwahati | Assam | Bongaigaon | 76 | Ranchi | West Bengal | Krishna Nagar (Nadia) |
| 33 | Guwahati | Assam | Lakhimpur | 77 | Ranchi | West Bengal | Malda |
| 34 | Guwahati | Assam | Dibrugarh | 78 | Ranchi | Bihar | Muzaffarpur |
| 35 | Guwahati | Assam | Guwahati | 79 | Ranchi | Bihar | Purnea |
| 36 | Guwahati | Arunachal Pradesh | Itanagar | 80 | Ranchi | West Bengal | Siliguri |
| 37 | Guwahati | Meghalaya | Shillong | 81 | Ranchi | West Bengal | Kolkata Center 1 |
| 38 | Guwahati | Assam | Silchar | 82 | Ranchi | Bihar | Patna |
| 39 | Guwahati | Tripura | Agartala | 83 | Ranchi | Jharkhand | Ranchi |
| 40 | Hyderabad | Chhattisgarh | Raipur | 84 | Ranchi | Jharkhand | Jamshedpur |
| 41 | Hyderabad | Telangana | Warangal | 85 | Ranchi | Jharkhand | Dhanbaad |

| | | | | | | | |
|---|---|---|---|---|---|---|---|
| 42 | Hyderabad | Telangana | Hyderabad | 86 | Ranchi | Jharkhand | Ranchi |
| 43 | Hyderabad | Andhra Pradesh | Vishakhapatnam | 87 | Ranchi | West Bengal | Asansol |
| 44 | Hyderabad | Odisha | Bhubaneshwar | 88 | Ranchi | West Bengal | Behrampur(Murshidabad) |

## 8.23 ANNEXURE-XXIII: List of Proposed ASKs

EXCEL SHEET

| Sl.no | Regional Office | State | District | ASK Type | Kits | Work Allocation |
|---|---|---|---|---|---|---|
| 1 | Bengaluru | Karnataka | Bengaluru | A+B | 24.0 | L1 |
| 2 | Ranchi | West Bengal | North 24 Parganas | A+B | 24.0 | L2 |
| 3 | Bengaluru | Kerala | Malappuram | A | 16.0 | L1 |
| 4 | Delhi | Delhi | North West Delhi | A | 16.0 | L2 |
| 5 | Hyderabad | Telangana | Hyderabad | A | 16.0 | L1 |
| 6 | Hyderabad | Telangana | Ranga Reddy | A | 16.0 | L2 |
| 7 | Delhi | Rajasthan | Jaipur | A | 16.0 | L1 |
| 8 | Lucknow | Uttar Pradesh | Prayagraj | A | 16.0 | L2 |
| 9 | Lucknow | Uttar Pradesh | Lucknow | A | 16.0 | L1 |
| 10 | Mumbai | Gujarat | Ahmedabad | A | 16.0 | L1 |
| 11 | Ranchi | West Bengal | Murshidabad | A | 16.0 | L1 |
| 12 | Ranchi | Bihar | Patna | A | 16.0 | L2 |
| 13 | Mumbai | Maharashtra | Pune | A | 16.0 | L1 |
| 14 | Bengaluru | Tamil Nadu | Chennai | A | 16.0 | L2 |
| 15 | Delhi | Delhi | South Delhi | A | 16.0 | L1 |
| 16 | Mumbai | Gujarat | Surat | A | 16.0 | L2 |
| 17 | Ranchi | West Bengal | Nadia | A | 16.0 | L1 |
| 18 | Delhi | Delhi | South West Delhi | A | 16.0 | L2 |
| 19 | Lucknow | Uttar Pradesh | Agra | A | 16.0 | L1 |
| 20 | Lucknow | Uttar Pradesh | Kanpur Nagar | A | 16.0 | L1 |
| 21 | Lucknow | Uttar Pradesh | Bareilly | A | 16.0 | L1 |
| 22 | Lucknow | Uttar Pradesh | Gorakhpur | A | 16.0 | L2 |
| 23 | Mumbai | Maharashtra | Thane | A | 16.0 | L1 |
| 24 | Hyderabad | Odisha | Ganjam | A | 16.0 | L2 |
| 25 | Ranchi | West Bengal | South 24 Parganas | A | 16.0 | L1 |
| 26 | Lucknow | Uttar Pradesh | Sitapur | A | 16.0 | L2 |
| 27 | Bengaluru | Kerala | Kozhikode | B | 8.0 | L1 |
| 28 | Bengaluru | Kerala | Ernakulam | B | 8.0 | L2 |
| 29 | Bengaluru | Karnataka | Belagavi | B | 8.0 | L1 |
| 30 | Lucknow | Uttar Pradesh | Jaunpur | B | 8.0 | L1 |
| 31 | Ranchi | West Bengal | Malda | B | 8.0 | L1 |

| | | | | | | |
|---|---|---|---|---|---|---|
| 32 | Lucknow | Uttar Pradesh | Azamgarh | B | 8.0 | L2 |
| 33 | Bengaluru | Kerala | Thiruvananthapuram | B | 8.0 | L1 |
| 34 | Ranchi | Jharkhand | Ranchi | B | 8.0 | L2 |
| 35 | Mumbai | Maharashtra | Nashik | B | 8.0 | L1 |
| 36 | Lucknow | Uttar Pradesh | Varanasi | B | 8.0 | L2 |
| 37 | Bengaluru | Kerala | Palakkad | B | 8.0 | L1 |
| 38 | Delhi | Uttarakhand | Dehradun | B | 8.0 | L2 |
| 39 | Ranchi | Bihar | East Champaran | B | 8.0 | L1 |
| 40 | Ranchi | Bihar | Muzaffarpur | B | 8.0 | L1 |
| 41 | Lucknow | Uttar Pradesh | Kheri | B | 8.0 | L1 |
| 42 | Mumbai | Maharashtra | Mumbai Suburban | B | 8.0 | L2 |
| 43 | Delhi | Uttarakhand | Udham Singh Nagar | B | 8.0 | L1 |
| 44 | Delhi | Delhi | West Delhi | B | 8.0 | L2 |
| 45 | Bengaluru | Kerala | Kannur | B | 8.0 | L1 |
| 46 | Bengaluru | Tamil Nadu | Coimbatore | B | 8.0 | L2 |
| 47 | Hyderabad | Odisha | Mayurbhanj | B | 8.0 | L1 |
| 48 | Bengaluru | Tamil Nadu | Madurai | B | 8.0 | L2 |
| 49 | Delhi | Madhya Pradesh | Indore | B | 8.0 | L1 |
| 50 | Delhi | Uttarakhand | Haridwar | B | 8.0 | L1 |
| 51 | Delhi | Delhi | East Delhi | B | 8.0 | L1 |
| 52 | Delhi | Rajasthan | Alwar | B | 8.0 | L2 |
| 53 | Hyderabad | Telangana | Medchal-malkajgiri | B | 8.0 | L1 |
| 54 | Hyderabad | Odisha | Khorda | B | 8.0 | L2 |
| 55 | Lucknow | Uttar Pradesh | Hardoi | B | 8.0 | L1 |
| 56 | Bengaluru | Kerala | Thrissur | B | 8.0 | L2 |
| 57 | Delhi | Rajasthan | Jodhpur | B | 8.0 | L1 |
| 58 | Bengaluru | Tamil Nadu | Tiruchirappalli | B | 8.0 | L2 |
| 59 | Lucknow | Uttar Pradesh | Gonda | B | 8.0 | L1 |
| 60 | Lucknow | Uttar Pradesh | Kushinagar | B | 8.0 | L1 |
| 61 | Chandigarh | Punjab | Ludhiana | B | 8.0 | L1 |
| 62 | Lucknow | Uttar Pradesh | Pratapgarh | B | 8.0 | L2 |
| 63 | Lucknow | Uttar Pradesh | Moradabad | B | 8.0 | L1 |
| 64 | Ranchi | West Bengal | Kolkata | B | 8.0 | L2 |
| 65 | Lucknow | Uttar Pradesh | Shahjahanpur | B | 8.0 | L1 |
| 66 | Lucknow | Uttar Pradesh | Ballia | B | 8.0 | L2 |
| 67 | Hyderabad | Chhattisgarh | Raipur | B | 8.0 | L1 |
| 68 | Lucknow | Uttar Pradesh | Ghaziabad | B | 8.0 | L2 |
| 69 | Ranchi | Bihar | Bhagalpur | B | 8.0 | L1 |
| 70 | Lucknow | Uttar Pradesh | Deoria | B | 8.0 | L1 |
| 71 | Delhi | Rajasthan | Nagaur | B | 8.0 | L1 |
| 72 | Lucknow | Uttar Pradesh | Bijnor | B | 8.0 | L2 |
| 73 | Lucknow | Uttar Pradesh | Meerut | B | 8.0 | L1 |
| 74 | Bengaluru | Tamil Nadu | Salem | B | 8.0 | L2 |

| | | | | | | |
|---|---|---|---|---|---|---|
| 75 | Ranchi | Bihar | Katihar | B | 8.0 | L1 |
| 76 | Chandigarh | Jammu And Kashmir | Jammu | B | 8.0 | L2 |
| 77 | Lucknow | Uttar Pradesh | Saharanpur | B | 8.0 | L1 |
| 78 | Ranchi | West Bengal | Paschim Bardhaman | B | 8.0 | L2 |
| 79 | Ranchi | West Bengal | Hooghly | B | 8.0 | L1 |
| 80 | Ranchi | West Bengal | Howrah | B | 8.0 | L1 |
| 81 | Lucknow | Uttar Pradesh | Aligarh | B | 8.0 | L1 |
| 82 | Hyderabad | Andhra Pradesh | Visakhapatnam | B | 8.0 | L2 |
| 83 | Lucknow | Uttar Pradesh | Bara Banki | B | 8.0 | L1 |
| 84 | Bengaluru | Kerala | Kollam | B | 8.0 | L2 |
| 85 | Lucknow | Uttar Pradesh | Bahraich | B | 8.0 | L1 |
| 86 | Hyderabad | Odisha | Cuttack | B | 8.0 | L2 |
| 87 | Ranchi | Bihar | Darbhanga | B | 8.0 | L1 |
| 88 | Ranchi | Bihar | Gaya | B | 8.0 | L2 |
| 89 | Ranchi | Bihar | West Champaran | B | 8.0 | L1 |
| 90 | Ranchi | West Bengal | Paschim Medinipur | B | 8.0 | L1 |
| 91 | Ranchi | Bihar | Samastipur | B | 8.0 | L1 |
| 92 | Hyderabad | Andhra Pradesh | Kurnool | B | 8.0 | L2 |
| 93 | Bengaluru | Tamil Nadu | Tiruvallur | B | 8.0 | L1 |
| 94 | Lucknow | Uttar Pradesh | Ghazipur | B | 8.0 | L2 |
| 95 | Lucknow | Uttar Pradesh | Budaun | B | 8.0 | L1 |
| 96 | Lucknow | Uttar Pradesh | Bulandshahar | B | 8.0 | L2 |
| 97 | Ranchi | Bihar | Begusarai | B | 8.0 | L1 |
| 98 | Ranchi | West Bengal | Cooch Behar | B | 8.0 | L2 |
| 99 | Ranchi | Bihar | Purnia | B | 8.0 | L1 |
| 100 | Lucknow | Uttar Pradesh | Maharajganj | B | 8.0 | L1 |
| 101 | Lucknow | Uttar Pradesh | Rae Bareli | B | 8.0 | L1 |
| 102 | Ranchi | Jharkhand | Dhanbad | B | 8.0 | L2 |
| 103 | Ranchi | Bihar | Madhubani | B | 8.0 | L1 |
| 104 | Ranchi | Bihar | Supaul | B | 8.0 | L2 |
| 105 | Hyderabad | Odisha | Baleswar | B | 8.0 | L1 |
| 106 | Chandigarh | Jammu And Kashmir | Baramula | B | 8.0 | L2 |
| 107 | Delhi | Rajasthan | Ajmer | B | 8.0 | L1 |
| 108 | Ranchi | West Bengal | Purba Medinipur | B | 8.0 | L2 |
| 109 | Ranchi | West Bengal | Birbhum | B | 8.0 | L1 |
| 110 | Mumbai | Gujarat | Banaskantha | B | 8.0 | L1 |
| 111 | Bengaluru | Tamil Nadu | Thanjavur | B | 8.0 | L1 |
| 112 | Mumbai | Gujarat | Vadodara | B | 8.0 | L2 |
| 113 | Delhi | Rajasthan | Sikar | B | 8.0 | L1 |
| 114 | Ranchi | Jharkhand | East Singhbhum | B | 8.0 | L2 |
| 115 | Delhi | Madhya Pradesh | Bhopal | B | 8.0 | L1 |
| 116 | Bengaluru | Tamil Nadu | Kancheepuram | B | 8.0 | L2 |
| 117 | Delhi | Rajasthan | Barmer | B | 8.0 | L1 |

| | | | | | | |
|---|---|---|---|---|---|---|
| 118 | Hyderabad | Chhattisgarh | Bilaspur | B | 8.0 | L2 |
| 119 | Lucknow | Uttar Pradesh | Gautam Buddha Nagar | B | 8.0 | L1 |
| 120 | Mumbai | Maharashtra | Jalgaon | B | 8.0 | L1 |
| 121 | Bengaluru | Tamil Nadu | Vellore | B | 8.0 | L1 |
| 122 | Ranchi | Bihar | Araria | B | 8.0 | L2 |
| 123 | Lucknow | Uttar Pradesh | Muzaffarnagar | B | 8.0 | L1 |
| 124 | Mumbai | Maharashtra | Nagpur | B | 8.0 | L2 |
| 125 | Mumbai | Maharashtra | Ahmadnagar | B | 8.0 | L1 |
| 126 | Ranchi | Bihar | Sitamarhi | B | 8.0 | L2 |
| 127 | Lucknow | Uttar Pradesh | Fatehpur | B | 8.0 | L1 |
| 128 | Hyderabad | Odisha | Sundergarh | B | 8.0 | L2 |
| 129 | Delhi | Rajasthan | Udaipur | B | 8.0 | L1 |
| 130 | Chandigarh | Jammu And Kashmir | Srinagar | B | 8.0 | L1 |
| 131 | Bengaluru | Tamil Nadu | Cuddalore | B | 8.0 | L1 |
| 132 | Bengaluru | Karnataka | Vijayapura | B | 8.0 | L2 |
| 133 | Hyderabad | Chhattisgarh | Durg | B | 8.0 | L1 |
| 134 | Bengaluru | Kerala | Kottayam | B | 8.0 | L2 |
| 135 | Ranchi | West Bengal | Uttar Dinajpur | B | 8.0 | L1 |
| 136 | Bengaluru | Karnataka | Mysuru | B | 8.0 | L2 |
| 137 | Hyderabad | Odisha | Kendujhar | B | 8.0 | L1 |
| 138 | Hyderabad | Andhra Pradesh | Guntur | C | 4.0 | L2 |
| 139 | Mumbai | Gujarat | Dahod | B | 8.0 | L1 |
| 140 | Hyderabad | Telangana | Warangal | B | 8.0 | L1 |
| 141 | Delhi | Delhi | North Delhi | B | 8.0 | L1 |
| 142 | Ranchi | West Bengal | Purba Bardhaman | C | 4.0 | L2 |
| 143 | Lucknow | Uttar Pradesh | Ayodhya | C | 4.0 | L1 |
| 144 | Bengaluru | Kerala | Alappuzha | C | 4.0 | L2 |
| 145 | Bengaluru | Tamil Nadu | Tirunelveli | C | 4.0 | L1 |
| 146 | Bengaluru | Karnataka | Dharwad | C | 4.0 | L2 |
| 147 | Hyderabad | Odisha | Jajpur | C | 4.0 | L1 |
| 148 | Bengaluru | Tamil Nadu | Tiruppur | C | 4.0 | L2 |
| 149 | Ranchi | Bihar | Saran | C | 4.0 | L1 |
| 150 | Lucknow | Uttar Pradesh | Rampur | C | 4.0 | L1 |
| 151 | Chandigarh | Jammu And Kashmir | Anantnag | C | 4.0 | L1 |
| 152 | Mumbai | Maharashtra | Aurangabad | C | 4.0 | L2 |
| 153 | Hyderabad | Andhra Pradesh | East Godavari | C | 4.0 | L1 |
| 154 | Hyderabad | Andhra Pradesh | Ananthapuramu | C | 4.0 | L2 |
| 155 | Hyderabad | Odisha | Balangir | C | 4.0 | L1 |
| 156 | Delhi | Madhya Pradesh | Dhar | C | 4.0 | L2 |
| 157 | Delhi | Madhya Pradesh | Jabalpur | C | 4.0 | L1 |
| 158 | Delhi | Madhya Pradesh | Sagar | C | 4.0 | L2 |
| 159 | Delhi | Madhya Pradesh | Chhindwara | C | 4.0 | L1 |
| 160 | Delhi | Rajasthan | Pali | C | 4.0 | L1 |

| | | | | | | |
|---|---|---|---|---|---|---|
| 161 | Ranchi | Jharkhand | Giridih | C | 4.0 | L1 |
| 162 | Bengaluru | Karnataka | Kalaburagi | C | 4.0 | L2 |
| 163 | Bengaluru | Tamil Nadu | Kanyakumari | C | 4.0 | L1 |
| 164 | Bengaluru | Tamil Nadu | Erode | C | 4.0 | L2 |
| 165 | Mumbai | Maharashtra | Solapur | C | 4.0 | L1 |
| 166 | Lucknow | Uttar Pradesh | Mau | C | 4.0 | L2 |
| 167 | Lucknow | Uttar Pradesh | Mirzapur | C | 4.0 | L1 |
| 168 | Chandigarh | Punjab | Amritsar | C | 4.0 | L2 |
| 169 | Mumbai | Gujarat | Panchmahals | C | 4.0 | L1 |
| 170 | Delhi | Rajasthan | Bharatpur | C | 4.0 | L1 |
| 171 | Delhi | Rajasthan | Bikaner | C | 4.0 | L1 |
| 172 | Bengaluru | Tamil Nadu | Dindigul | C | 4.0 | L2 |
| 173 | Chandigarh | Jammu And Kashmir | Kupwara | C | 4.0 | L1 |
| 174 | Bengaluru | Tamil Nadu | Tiruvannamalai | C | 4.0 | L2 |
| 175 | Hyderabad | Chhattisgarh | Janjgir-champa | C | 4.0 | L1 |
| 176 | Mumbai | Gujarat | Anand | C | 4.0 | L2 |
| 177 | Lucknow | Uttar Pradesh | Unnao | C | 4.0 | L1 |
| 178 | Ranchi | Bihar | Madhepura | C | 4.0 | L2 |
| 179 | Ranchi | Jharkhand | Bokaro | C | 4.0 | L1 |
| 180 | Lucknow | Uttar Pradesh | Sultanpur | C | 4.0 | L1 |
| 181 | Hyderabad | Odisha | Kalahandi | C | 4.0 | L1 |
| 182 | Delhi | Madhya Pradesh | Gwalior | C | 4.0 | L2 |
| 183 | Mumbai | Gujarat | Rajkot | C | 4.0 | L1 |
| 184 | Lucknow | Uttar Pradesh | Ambedkar Nagar | C | 4.0 | L2 |
| 185 | Ranchi | Jharkhand | Hazaribagh | C | 4.0 | L1 |
| 186 | Hyderabad | Andhra Pradesh | Chittoor | C | 4.0 | L2 |
| 187 | Hyderabad | Andhra Pradesh | Y. S. R | C | 4.0 | L1 |
| 188 | Hyderabad | Andhra Pradesh | Srikakulam | C | 4.0 | L2 |
| 189 | Ranchi | Bihar | Nalanda | C | 4.0 | L1 |
| 190 | Lucknow | Uttar Pradesh | Firozabad | C | 4.0 | L1 |
| 191 | Lucknow | Uttar Pradesh | Sambhal | C | 4.0 | L1 |
| 192 | Ranchi | West Bengal | Bankura | C | 4.0 | L2 |
| 193 | Hyderabad | Chhattisgarh | Rajnandgaon | C | 4.0 | L1 |
| 194 | Lucknow | Uttar Pradesh | Amethi | C | 4.0 | L2 |
| 195 | Delhi | Madhya Pradesh | Rewa | C | 4.0 | L1 |
| 196 | Lucknow | Uttar Pradesh | Basti | C | 4.0 | L2 |
| 197 | Ranchi | Bihar | Siwan | C | 4.0 | L1 |
| 198 | Hyderabad | Andhra Pradesh | West Godavari | C | 4.0 | L2 |
| 199 | Bengaluru | Kerala | Kasaragod | C | 4.0 | L1 |
| 200 | Mumbai | Maharashtra | Kolhapur | C | 4.0 | L1 |
| 201 | Bengaluru | Tamil Nadu | Pudukkottai | C | 4.0 | L1 |
| 202 | Lucknow | Uttar Pradesh | Siddharthnagar | C | 4.0 | L2 |
| 203 | Ranchi | Jharkhand | Palamu | C | 4.0 | L1 |

| | | | | | | |
|---|---|---|---|---|---|---|
| 204 | Lucknow | Uttar Pradesh | Amroha | C | 4.0 | L2 |
| 205 | Hyderabad | Andhra Pradesh | Sri Potti Sriramulu Nellore | C | 4.0 | L1 |
| 206 | Chandigarh | Haryana | Gurgaon | C | 4.0 | L2 |
| 207 | Delhi | Rajasthan | Jhunjhunu | C | 4.0 | L1 |
| 208 | Bengaluru | Karnataka | Davangere | C | 4.0 | L2 |
| 209 | Lucknow | Uttar Pradesh | Mathura | C | 4.0 | L1 |
| 210 | Delhi | Delhi | North East Delhi | C | 4.0 | L1 |
| 211 | Ranchi | Jharkhand | Godda | C | 4.0 | L1 |
| 212 | Delhi | Uttarakhand | Nainital | C | 4.0 | L2 |
| 213 | Bengaluru | Karnataka | Dakshina Kannada | C | 4.0 | L1 |
| 214 | Delhi | Rajasthan | Bhilwara | C | 4.0 | L2 |
| 215 | Delhi | Madhya Pradesh | Betul | C | 4.0 | L1 |
| 216 | Mumbai | Gujarat | Bhavnagar | C | 4.0 | L2 |
| 217 | Lucknow | Uttar Pradesh | Chandauli | C | 4.0 | L1 |
| 218 | Ranchi | Jharkhand | Garhwa | C | 4.0 | L2 |
| 219 | Hyderabad | Telangana | Karimnagar | C | 4.0 | L1 |
| 220 | Ranchi | Jharkhand | Deoghar | C | 4.0 | L1 |
| 221 | Bengaluru | Tamil Nadu | Thoothukkudi | C | 4.0 | L1 |
| 222 | Guwahati | Assam | Nagaon | C | 4.0 | L2 |
| 223 | Ranchi | Bihar | Rohtas | C | 4.0 | L1 |
| 224 | Ranchi | Bihar | Vaishali | C | 4.0 | L2 |
| 225 | Bengaluru | Tamil Nadu | Krishnagiri | C | 4.0 | L1 |
| 226 | Chandigarh | Haryana | Karnal | C | 4.0 | L2 |
| 227 | Hyderabad | Telangana | Nalgonda | C | 4.0 | L1 |
| 228 | Hyderabad | Odisha | Koraput | C | 4.0 | L2 |
| 229 | Hyderabad | Andhra Pradesh | Prakasam | C | 4.0 | L1 |
| 230 | Bengaluru | Tamil Nadu | Virudhunagar | C | 4.0 | L1 |
| 231 | Bengaluru | Tamil Nadu | Villupuram | C | 4.0 | L1 |
| 232 | Lucknow | Uttar Pradesh | Sant Ravidas Nagar | C | 4.0 | L2 |
| 233 | Mumbai | Gujarat | Mahesana | C | 4.0 | L1 |
| 234 | Hyderabad | Odisha | Bargarh | C | 4.0 | L2 |
| 235 | Hyderabad | Odisha | Puri | C | 4.0 | L1 |
| 236 | Ranchi | West Bengal | Puruliya | C | 4.0 | L2 |
| 237 | Ranchi | Bihar | Gopalganj | C | 4.0 | L1 |
| 238 | Chandigarh | Haryana | Faridabad | C | 4.0 | L2 |
| 239 | Chandigarh | Haryana | Mewat | C | 4.0 | L1 |
| 240 | Mumbai | Gujarat | Kheda | C | 4.0 | L1 |
| 241 | Bengaluru | Karnataka | Bagalkot | C | 4.0 | L1 |
| 242 | Bengaluru | Karnataka | Raichur | C | 4.0 | L2 |
| 243 | Delhi | Rajasthan | Kota | C | 4.0 | L1 |
| 244 | Lucknow | Uttar Pradesh | Jhansi | C | 4.0 | L2 |
| 245 | Hyderabad | Chhattisgarh | Raigarh | C | 4.0 | L1 |

| | | | | | | |
|---|---|---|---|---|---|---|
| 246 | Hyderabad | Telangana | Mahabubnagar | C | 4.0 | L2 |
| 247 | Delhi | Madhya Pradesh | Ujjain | C | 4.0 | L1 |
| 248 | Hyderabad | Telangana | Nizamabad | C | 4.0 | L2 |
| 249 | Ranchi | Bihar | Aurangabad | C | 4.0 | L1 |
| 250 | Lucknow | Uttar Pradesh | Sonbhadra | C | 4.0 | L1 |
| 251 | Hyderabad | Telangana | Khammam | C | 4.0 | L1 |
| 252 | Bengaluru | Karnataka | Tumakuru | C | 4.0 | L2 |
| 253 | Lucknow | Uttar Pradesh | Pilibhit | C | 4.0 | L1 |
| 254 | Delhi | Rajasthan | Ganganagar | C | 4.0 | L2 |
| 255 | Ranchi | Bihar | Kishanganj | C | 4.0 | L1 |
| 256 | Delhi | Madhya Pradesh | Khargone | C | 4.0 | L2 |
| 257 | Lucknow | Uttar Pradesh | Sant Kabir Nagar | C | 4.0 | L1 |
| 258 | Delhi | Rajasthan | Churu | C | 4.0 | L2 |
| 259 | Ranchi | West Bengal | Darjeeling | C | 4.0 | L1 |
| 260 | Delhi | Madhya Pradesh | Barwani | C | 4.0 | L1 |
| 261 | Mumbai | Maharashtra | Nanded | C | 4.0 | L1 |
| 262 | Hyderabad | Odisha | Kendrapara | C | 4.0 | L2 |
| 263 | Delhi | Rajasthan | Jalor | C | 4.0 | L1 |
| 264 | Lucknow | Uttar Pradesh | Farrukhabad | C | 4.0 | L2 |
| 265 | Delhi | Rajasthan | Banswara | C | 4.0 | L1 |
| 266 | Delhi | Madhya Pradesh | Balaghat | C | 4.0 | L2 |
| 267 | Mumbai | Maharashtra | Amravati | C | 4.0 | L1 |
| 268 | Mumbai | Gujarat | Bharuch | C | 4.0 | L2 |
| 269 | Delhi | Rajasthan | Hanumangarh | C | 4.0 | L1 |
| 270 | Hyderabad | Andhra Pradesh | Krishna | C | 4.0 | L1 |
| 271 | Delhi | Madhya Pradesh | Chhatarpur | C | 4.0 | L1 |
| 272 | Hyderabad | Chhattisgarh | Baloda Bazar | C | 4.0 | L2 |
| 273 | Hyderabad | Odisha | Bhadrak | C | 4.0 | L1 |
| 274 | Hyderabad | Andhra Pradesh | Vizianagaram | C | 4.0 | L2 |
| 275 | Lucknow | Uttar Pradesh | Etah | C | 4.0 | L1 |
| 276 | Mumbai | Maharashtra | Raigarh | C | 4.0 | L2 |
| 277 | Delhi | Madhya Pradesh | Satna | C | 4.0 | L1 |
| 278 | Hyderabad | Telangana | Sangareddy | C | 4.0 | L2 |
| 279 | Bengaluru | Tamil Nadu | Namakkal | C | 4.0 | L1 |
| 280 | Chandigarh | Jammu And Kashmir | Budgam | C | 4.0 | L1 |
| 281 | Lucknow | Uttar Pradesh | Kannauj | C | 4.0 | L1 |
| 282 | Guwahati | Assam | Cachar | C | 4.0 | L2 |
| 283 | Chandigarh | Punjab | Jalandhar | C | 4.0 | L1 |
| 284 | Mumbai | Maharashtra | Palghar | C | 4.0 | L2 |
| 285 | Delhi | Delhi | Central Delhi | C | 4.0 | L1 |
| 286 | Mumbai | Dadra And Nagar Haveli And Daman And Diu | Dadra and Nagar Haveli | C | 4.0 | L2 |
| 287 | Lucknow | Uttar Pradesh | Banda | C | 4.0 | L1 |
| 288 | Chandigarh | Himachal Pradesh | Kangra | C | 4.0 | L2 |

| | | | | | | |
|---|---|---|---|---|---|---|
| 289 | Ranchi | Bihar | Khagaria | C | 4.0 | L1 |
| 290 | Lucknow | Uttar Pradesh | Etawah | C | 4.0 | L1 |
| 291 | Hyderabad | Andhra Pradesh | N. T. R | C | 4.0 | L1 |
| 292 | Hyderabad | Odisha | Nabarangapur | C | 4.0 | L2 |
| 293 | Lucknow | Uttar Pradesh | Balrampur | C | 4.0 | L1 |
| 294 | Delhi | Madhya Pradesh | Morena | C | 4.0 | L2 |
| 295 | Hyderabad | Odisha | Angul | C | 4.0 | L1 |
| 296 | Bengaluru | Tamil Nadu | Ramanathapuram | C | 4.0 | L2 |
| 297 | Mumbai | Maharashtra | Mumbai City | C | 4.0 | L1 |
| 298 | Mumbai | Maharashtra | Beed | C | 4.0 | L2 |
| 299 | Mumbai | Gujarat | Kachchh | C | 4.0 | L1 |
| 300 | Bengaluru | Karnataka | Ballari | C | 4.0 | L1 |
| 301 | Mumbai | Maharashtra | Sangli | C | 4.0 | L1 |
| 302 | Mumbai | Maharashtra | Buldhana | C | 4.0 | L2 |
| 303 | Guwahati | Assam | Kamrup Metro | C | 4.0 | L1 |
| 304 | Chandigarh | Jammu And Kashmir | Rajouri | C | 4.0 | L2 |
| 305 | Ranchi | West Bengal | Dakshin Dinajpur | C | 4.0 | L1 |
| 306 | Mumbai | Maharashtra | Yavatmal | C | 4.0 | L2 |
| 307 | Hyderabad | Chhattisgarh | Korba | C | 4.0 | L1 |
| 308 | Guwahati | Assam | Dhubri | C | 4.0 | L2 |
| 309 | Lucknow | Uttar Pradesh | Mainpuri | C | 4.0 | L1 |
| 310 | Bengaluru | Tamil Nadu | Tenkasi | C | 4.0 | L1 |
| 311 | Lucknow | Uttar Pradesh | Auraiya | C | 4.0 | L1 |
| 312 | Mumbai | Maharashtra | Latur | C | 4.0 | L2 |
| 313 | Ranchi | Bihar | Saharsa | C | 4.0 | L1 |
| 314 | Mumbai | Gujarat | Gir Somnath | C | 4.0 | L2 |
| 315 | Delhi | Madhya Pradesh | Jhabua | C | 4.0 | L1 |
| 316 | Chandigarh | Haryana | Hisar | C | 4.0 | L2 |
| 317 | Hyderabad | Odisha | Rayagada | C | 4.0 | L1 |
| 318 | Lucknow | Uttar Pradesh | Kaushambi | C | 4.0 | L2 |
| 319 | Mumbai | Maharashtra | Satara | C | 4.0 | L1 |
| 320 | Bengaluru | Kerala | Pathanamthitta | C | 4.0 | L1 |
| 321 | Delhi | Madhya Pradesh | Rajgarh | C | 4.0 | L1 |
| 322 | Delhi | Rajasthan | Dungarpur | C | 4.0 | L2 |
| 323 | Chandigarh | Haryana | Sonipat | C | 4.0 | L1 |
| 324 | Lucknow | Uttar Pradesh | Kasganj | C | 4.0 | L2 |
| 325 | Ranchi | Bihar | Nawada | C | 4.0 | L1 |
| 326 | Delhi | Madhya Pradesh | Ratlam | C | 4.0 | L2 |
| 327 | Hyderabad | Chhattisgarh | Mahasamund | C | 4.0 | L1 |
| 328 | Mumbai | Gujarat | Navsari | C | 4.0 | L2 |
| 329 | Hyderabad | Odisha | Dhenkanal | C | 4.0 | L1 |
| 330 | Guwahati | Assam | Kamrup | C | 4.0 | L1 |
| 331 | Bengaluru | Tamil Nadu | Kallakurichi | C | 4.0 | L1 |

| | | | | | | |
|---|---|---|---|---|---|---|
| 332 | Lucknow | Uttar Pradesh | Jalaun | C | 4.0 | L2 |
| 333 | Chandigarh | Haryana | Panipat | C | 4.0 | L1 |
| 334 | Bengaluru | Karnataka | Chitradurga | C | 4.0 | L2 |
| 335 | Lucknow | Uttar Pradesh | Kanpur Dehat | C | 4.0 | L1 |
| 336 | Delhi | Madhya Pradesh | Mandsaur | C | 4.0 | L2 |
| 337 | Bengaluru | Karnataka | Bidar | C | 4.0 | L1 |
| 338 | Chandigarh | Punjab | Patiala | C | 4.0 | L2 |
| 339 | Chandigarh | Haryana | Bhiwani | C | 4.0 | L1 |
| 340 | Chandigarh | Haryana | Yamuna Nagar | C | 4.0 | L1 |
| 341 | Chandigarh | Jammu And Kashmir | Pulwama | C | 4.0 | L1 |
| 342 | Bengaluru | Tamil Nadu | Sivaganga | C | 4.0 | L2 |
| 343 | Hyderabad | Chhattisgarh | Jashpur | C | 4.0 | L1 |
| 344 | Ranchi | Jharkhand | Sahebganj | C | 4.0 | L2 |
| 345 | Delhi | Madhya Pradesh | Vidisha | C | 4.0 | L1 |
| 346 | Ranchi | Bihar | Bhojpur | C | 4.0 | L2 |
| 347 | Mumbai | Gujarat | Junagadh | C | 4.0 | L1 |
| 348 | Chandigarh | Haryana | Jind | C | 4.0 | L2 |
| 349 | Mumbai | Gujarat | Valsad | C | 4.0 | L1 |
| 350 | Delhi | Rajasthan | Jhalawar | C | 4.0 | L1 |
| 351 | Delhi | Rajasthan | Dausa | C | 4.0 | L1 |
| 352 | Delhi | Madhya Pradesh | Sehore | C | 4.0 | L2 |
| 353 | Guwahati | Assam | Bongaigaon | C | 4.0 | L1 |
| 354 | Hyderabad | Odisha | Jagatsinghapur | C | 4.0 | L2 |
| 355 | Bengaluru | Tamil Nadu | Theni | C | 4.0 | L1 |
| 356 | Mumbai | Maharashtra | Jalna | C | 4.0 | L2 |
| 357 | Guwahati | Tripura | West Tripura | C | 4.0 | L1 |
| 358 | Ranchi | West Bengal | Jalpaiguri | C | 4.0 | L2 |
| 359 | Delhi | Madhya Pradesh | Shivpuri | C | 4.0 | L1 |
| 360 | Ranchi | Bihar | Jamui | C | 4.0 | L1 |
| 361 | Mumbai | Maharashtra | Chandrapur | C | 4.0 | L1 |
| 362 | Delhi | Madhya Pradesh | Dewas | C | 4.0 | L2 |
| 363 | Ranchi | West Bengal | Alipurduar | C | 4.0 | L1 |
| 364 | Hyderabad | Andhra Pradesh | Eluru | C | 4.0 | L2 |
| 365 | Ranchi | Bihar | Banka | C | 4.0 | L1 |
| 366 | Chandigarh | Jammu And Kashmir | Punch | C | 4.0 | L2 |
| 367 | Bengaluru | Kerala | Idukki | C | 4.0 | L1 |
| 368 | Bengaluru | Tamil Nadu | Dharmapuri | C | 4.0 | L2 |
| 369 | Bengaluru | Karnataka | Shivamogga | C | 4.0 | L1 |
| 370 | Hyderabad | Odisha | Sambalpur | C | 4.0 | L1 |
| 371 | Mumbai | Gujarat | Sabarkantha | C | 4.0 | L1 |
| 372 | Lucknow | Uttar Pradesh | Hathras | C | 4.0 | L2 |
| 373 | Guwahati | Assam | Barpeta | C | 4.0 | L1 |
| 374 | Delhi | Madhya Pradesh | Katni | C | 4.0 | L2 |

| | | | | | | |
|---|---|---|---|---|---|---|
| 375 | Chandigarh | Punjab | Gurdaspur | C | 4.0 | L1 |
| 376 | Hyderabad | Odisha | Nayagarh | C | 4.0 | L2 |
| 377 | Chandigarh | Jammu And Kashmir | Kulgam | C | 4.0 | L1 |
| 378 | Delhi | Madhya Pradesh | Singrauli | C | 4.0 | L2 |
| 379 | Chandigarh | Punjab | Hoshiarpur | C | 4.0 | L1 |
| 380 | Hyderabad | Andhra Pradesh | Kakinada | C | 4.0 | L1 |
| 381 | Mumbai | Maharashtra | Dhule | C | 4.0 | L1 |
| 382 | Lucknow | Uttar Pradesh | Shrawasti | C | 4.0 | L2 |
| 383 | Ranchi | Jharkhand | Dumka | C | 4.0 | L1 |
| 384 | Delhi | Rajasthan | Chittorgarh | C | 4.0 | L2 |
| 385 | Hyderabad | Telangana | Bhadradri Kothagudem | C | 4.0 | L1 |
| 386 | Bengaluru | Tamil Nadu | Thiruvarur | C | 4.0 | L2 |
| 387 | Bengaluru | Karnataka | Koppal | C | 4.0 | L1 |
| 388 | Chandigarh | Haryana | Palwal | C | 4.0 | L2 |
| 389 | Delhi | Madhya Pradesh | Tikamgarh | C | 4.0 | L1 |
| 390 | Hyderabad | Telangana | Adilabad | C | 4.0 | L1 |
| 391 | Delhi | Madhya Pradesh | Bhind | C | 4.0 | L1 |
| 392 | Ranchi | Bihar | Kaimur (Bhabua) | C | 4.0 | L2 |
| 393 | Mumbai | Gujarat | Patan | C | 4.0 | L1 |
| 394 | Delhi | Rajasthan | Dholpur | C | 4.0 | L2 |
| 395 | Delhi | Rajasthan | Rajsamand | C | 4.0 | L1 |
| 396 | Mumbai | Gujarat | Gandhinagar | C | 4.0 | L2 |
| 397 | Delhi | Rajasthan | Karauli | C | 4.0 | L1 |
| 398 | Bengaluru | Karnataka | Haveri | C | 4.0 | L2 |
| 399 | Chandigarh | Haryana | Sirsa | C | 4.0 | L1 |
| 400 | Chandigarh | Haryana | Ambala | C | 4.0 | L1 |
| 401 | Chandigarh | Chandigarh | Chandigarh | C | 4.0 | L1 |
| 402 | Chandigarh | Haryana | Rohtak | C | 4.0 | L2 |
| 403 | Bengaluru | Karnataka | Hassan | C | 4.0 | L1 |
| 404 | Ranchi | Jharkhand | West Singhbhum | C | 4.0 | L2 |
| 405 | Mumbai | Gujarat | Surendra Nagar | C | 4.0 | L1 |
| 406 | Delhi | Madhya Pradesh | Seoni | C | 4.0 | L2 |
| 407 | Hyderabad | Chhattisgarh | Bastar | C | 4.0 | L1 |
| 408 | Delhi | Rajasthan | Tonk | C | 4.0 | L2 |
| 409 | Bengaluru | Karnataka | Uttara Kannada | C | 4.0 | L1 |
| 410 | Hyderabad | Andhra Pradesh | Sri Sathya Sai | C | 4.0 | L1 |
| 411 | Hyderabad | Andhra Pradesh | Alluri Sitharama Raju | C | 4.0 | L1 |
| 412 | Ranchi | Bihar | Buxar | C | 4.0 | L2 |
| 413 | Chandigarh | Haryana | Kurukshetra | C | 4.0 | L1 |
| 414 | Delhi | Madhya Pradesh | Narsinghpur | C | 4.0 | L2 |
| 415 | Chandigarh | Himachal Pradesh | Shimla | C | 4.0 | L1 |
| 416 | Delhi | Rajasthan | Baran | C | 4.0 | L2 |
| 417 | Chandigarh | Punjab | Bathinda | C | 4.0 | L1 |

| | | | | | | |
|---|---|---|---|---|---|---|
| 418 | Delhi | Madhya Pradesh | Khandwa | C | 4.0 | L2 |
| 419 | Delhi | Uttarakhand | Almora | C | 4.0 | L1 |
| 420 | Mumbai | Dadra And Nagar Haveli And Daman And Diu | Daman | C | 4.0 | L1 |
| 421 | Lucknow | Uttar Pradesh | Shamli | C | 4.0 | L1 |
| 422 | Hyderabad | Chhattisgarh | Surguja | C | 4.0 | L2 |
| 423 | Chandigarh | Haryana | Kaithal | C | 4.0 | L1 |
| 424 | Chandigarh | Haryana | Jhajjar | C | 4.0 | L2 |
| 425 | Delhi | Uttarakhand | Tehri Garhwal | C | 4.0 | L1 |
| 426 | Guwahati | Assam | Lakhimpur | C | 4.0 | L2 |
| 427 | Chandigarh | Jammu And Kashmir | Udhampur | C | 4.0 | L1 |
| 428 | Hyderabad | Andhra Pradesh | Tirupati | C | 4.0 | L2 |
| 429 | Mumbai | Gujarat | Jamnagar | C | 4.0 | L1 |
| 430 | Bengaluru | Karnataka | Yadgir | C | 4.0 | L1 |
| 431 | Hyderabad | Telangana | Suryapet | C | 4.0 | L1 |
| 432 | Mumbai | Maharashtra | Nandurbar | C | 4.0 | L2 |
| 433 | Delhi | Madhya Pradesh | Raisen | C | 4.0 | L1 |
| 434 | Hyderabad | Chhattisgarh | Balod | C | 4.0 | L2 |
| 435 | Chandigarh | Jammu And Kashmir | Kathua | C | 4.0 | L1 |
| 436 | Bengaluru | Kerala | Wayanad | C | 4.0 | L2 |
| 437 | Delhi | Madhya Pradesh | Mandla | C | 4.0 | L1 |
| 438 | Lucknow | Uttar Pradesh | Hamirpur | C | 4.0 | L2 |
| 439 | Delhi | Madhya Pradesh | Shahdol | C | 4.0 | L1 |
| 440 | Bengaluru | Tamil Nadu | Tirupattur | C | 4.0 | L1 |
| 441 | Lucknow | Uttar Pradesh | Hapur | C | 4.0 | L1 |
| 442 | Bengaluru | Karnataka | Kolar | C | 4.0 | L2 |
| 443 | Mumbai | Gujarat | Arvalli | C | 4.0 | L1 |
| 444 | Delhi | Madhya Pradesh | Alirajpur | C | 4.0 | L2 |
| 445 | Mumbai | Gujarat | Amreli | C | 4.0 | L1 |
| 446 | Guwahati | Assam | Dibrugarh | C | 4.0 | L2 |
| 447 | Ranchi | Jharkhand | Seraikela-Kharsawan | C | 4.0 | L1 |
| 448 | Delhi | Rajasthan | Sawai Madhopur | C | 4.0 | L2 |
| 449 | Chandigarh | Himachal Pradesh | Mandi | C | 4.0 | L1 |
| 450 | Hyderabad | Odisha | Kandhamal | C | 4.0 | L1 |
| 451 | Delhi | Madhya Pradesh | Sidhi | C | 4.0 | L1 |
| 452 | Guwahati | Assam | Goalpara | C | 4.0 | L2 |
| 453 | Hyderabad | Chhattisgarh | Surajpur | C | 4.0 | L1 |
| 454 | Mumbai | Maharashtra | Akola | C | 4.0 | L2 |
| 455 | Delhi | Uttarakhand | Pauri Garhwal | C | 4.0 | L1 |
| 456 | Hyderabad | Odisha | Gajapati | C | 4.0 | L2 |
| 457 | Mumbai | Maharashtra | Parbhani | C | 4.0 | L1 |
| 458 | Hyderabad | Telangana | Kamareddy | C | 4.0 | L2 |
| 459 | Hyderabad | Andhra Pradesh | Palnadu | C | 4.0 | L1 |
| 460 | Mumbai | Gujarat | Mahisagar | C | 4.0 | L1 |

| | | | | | | |
|---|---|---|---|---|---|---|
| 461 | Chandigarh | Haryana | Fatehabad | C | 4.0 | L1 |
| 462 | Bengaluru | Puducherry | Puducherry | C | 4.0 | L2 |
| 463 | Guwahati | Meghalaya | East Khasi Hills | C | 4.0 | L1 |
| 464 | Guwahati | Manipur | Imphal West | C | 4.0 | L2 |
| 465 | Mumbai | Goa | South Goa | C | 4.0 | L1 |
| 466 | Guwahati | Nagaland | Dimapur | C | 4.0 | L2 |
| 467 | Guwahati | Arunachal Pradesh | Papum Pare | C | 4.0 | L1 |
| 468 | Guwahati | Mizoram | Aizawl | C | 4.0 | L2 |
| 469 | Chandigarh | Ladakh | Leh | C | 4.0 | L1 |
| 470 | Guwahati | Sikkim | East Sikkim | C | 4.0 | L1 |
| 471 | Hyderabad | Andaman and Nicobar Islands | South Andaman | C | 4.0 | L1 |

## 8.24 ANNEXURE-XXIV Aadhaar Enrolment KIT specifications ECMP and CELC

Aadhaar enrolment kit consists of a set of hardware devices required to carry out successful Aadhaar enrolments & update. This set of devices comprises of following devices.

I. Laptop/Desktop
II. Monitor
III. Multifunction printer/scanner
IV. White screen
V. Focus Light
VI. Surge Protector spike
VII. Iris Scanner
VIII. Camera
IX. Slap scanner
X. Global Navigation Satellite System (GNSS) Device
XI. Single Finger Print RD L1 device
XII. Single Iris Scanner RD device

1. All these devices shall be as per UIDAI's specifications.
2. Biometric devices (Slap/Iris Scanner/Single Iris Scanner) L0 RD device and Single Finger Print RD L1 device shall be STQC certified.
3. Complete kit warranty shall be for 3 years except White screen, Focus light & surge protector.
4. During warranty, faulty equipment's shall be replaced/repaired within 7 days.
5. Aadhaar Enrolment Kit comprising of specific make/model of device shall be UIDAI certified for its working with latest UIDAI's enrolment client (ECMP)
6. AEK vendors to provide Manufacturers Authorization Form (MAF) issued by OEM for warranty support.
7. It is the responsibility of the AEK vendor/OEM to provide Standard drivers, java based SDK, **digitally signed VDM** with source code and on demand support for the devices which are part of the AEK.

**Minimum Specification of Aadhaar Enrolment Equipment**

**Item S.1.1. – Laptop**

| Specification | Details |
|---|---|
| Machine Form Factor | Laptop |
| CPU | 4 Core processor or higher with Max Frequency 4.0 GHz or higher and 10 MB Cache or higher |
| Display | Minimum 14" HD Anti-Glare (16:9) |
| Display type | LED |
| Connectivity | Wi-Fi (IEEE 802.11b/g/n/ac) and Ethernet (10/1000 Base-T) |
| MEMORY | Min. 8-GB DDR4RAM or higher expandable up to 16-GB or higher with 1 DIMM SLOT FREE |
| Solid-State Drive (SSD) | Minimum 512GB SSD (or Higher) |
| Input/output Ports | One HDMI |
| | Two (VGA/ DP Port/Type C/HDMI ) port with Display Transfer feature |
| | Dedicated Minimum 3 USB 2.0 port* or higher |
| | One Ethernet (RJ-45) |
| Battery Backup | 6hrs backup time in case of laptop |
| Chipset | System-on-a-Chip |
| Graphics | Integrated Graphics |
| Keyboard | Integrated for laptop sized (Minimum 84 Keys) Windows compatible Spill-resistant keyword |
| Touchpad | Wide Touchpad below keyboard for laptop |
| Preloaded OS | Windows 11 professional or higher (Standard and Home edition of windows are not allowed) |
| Certification | BIS, , or any other relevant Indian Certificates |
| ACCESSORIES | *USB Hub with multiple USB connections (enabling 5 devices plug-in through USB port)*, Laptop carrying case |
| WARRANTY | 3 years comprehensive onsite-warranty including Battery and power adapter |
| ANTI-VIRUS | Reputed Antivirus/EDR software with regular signature updates |
| TPM | System should support Trusted Platform Module (TPM) version 2.0 |

### Item S.1.1.1 – Desktop

| Specification | Details |
|---|---|
| Machine Form Factor | Desktop(Small form Factor) |
| CPU | 4 Core processor or higher with Max Frequency 4.0 Ghz or higher and 10 MB Cache or higher |
| MEMORY | Min. 8-GB DDR4RAM or higher expandable up to 16-GB or higher with 1 DIMM SLOT FREE |
| Connectivity | Ethernet (10/1000 Base-T) |
| Solid-State Drive (SSD) | Minimum 512GB SSD (or Higher) |
| Input/output Ports | Min 1 HDMI |
| | One (VGA/ DP Port/Type C ) port with Display Transfer feature supported by Monitor |
| | Dedicated Minimum 5 USB 2.0 port or Higher |
| | One Ethernet (RJ-45) |
| Battery Backup | 0.5KVA UPS with 30 min backup time For desktop |
| Chipset | Integrated with CPU or equivalent |
| Graphics | Integrated Graphics |
| Keyboard | (Minimum 104 Keys) Windows compatible Spill-resistant keyword |
| Touchpad | Optical USB mouse |
| Preloaded OS | Windows 11 professional or higher (Standard and Home edition of windows are not allowed) |
| Certification | BIS, or any other relevant Indian Certificates |
| WARRANTY | 3 years comprehensive onsite-warranty |
| ANTI-VIRUS | Reputed Antivirus/EDR software with regular signature updates |
| TPM | System should support Trusted Platform Module (TPM) version 2.0 |

### Item S.1.2. - Monitor

| Specification | Details |
|---|---|
| Size | 15-16 inch or higher |
| Type | LED |
| Resolution | 1024 x 768 or above |
| **Note:** Two suggested (in case of desktop) - One for Operator view and One for Resident view | |

### Item S.1.3. – Multi Functional Device (MFD)

| Specification | Details |
|---|---|
| Function | PRINT COPY SCAN |
| DUTY CYCLE IN PAGES | 3000 PAGES per month |
| Print Speed PPM – BLACK (A4) | 18 PPM or better |
| Resolution | 600 X 600 DPI |
| Printing Technology | Ink Tank /laser |
| Custom media size | A4 |
| Standard operating system supported | Compatible with Windows 11 professional or higher |
| Scan resolution | 600 X 600 DPI OPTICAL |
| Bit/color depth | 24 BITS |
| Copy speed | 18 CPM or better |
| Copy resolution | 600 X 600 DPI |
| Scan file format | Minimum PDF,JPEG, |
| BIS Registration under CRS of MeitY | Yes |
| Onsite OEM Warranty | Minimum 3 years |

### Item S.1.4. – White Screen

| Specification | Details |
|---|---|
| Size | 4 X 5 ft Stand mountable / wall mountable |
| Accessories | Stand |
| Non-Reflecting | Yes |
| Opaque | Yes |

**Item S.1.5. – Focus Light**

| Specification | Details |
|---|---|
| Type | LED, minimum 5 W |
| Accessories | Stand, 2Mrts Wire and on/off Switch near the operator |

**Item S.1.6. – Surge Protector Spike**

| Specification | Details |
|---|---|
| General | 6 nos. of 5A sockets (4 Indian style + 2 International Style), Fuse, on/off Switch and ISO mark |

**Item S.2.1 – Iris Device Specification**

| **Specification** | **Stationary (mounted: wall, tripod or stand)[1]** | **Hand_held [2]** | **Hand-held with alignment aid[3]** |
|---|---|---|---|
| Standard compliance for image capture | ISO/IEC 19497-6 (2005 or preferable2011 version) | | |
| Iris Diameter (In pixel) | > 210 | | |
| Spatial Resolution Pixel Resolution | > 60% @ 4.0 Lp/mm > =18 Pixels/mm | | |
| # of simultaneous captured eyes[4] | 2 | | |
| Viewfinder | External | Internal | External or Internal |
| Capture distance | > 750 mm | > 50mm | > 20 mm |
| Capture volume (width/height/depth) | >250x500x500mm | > 20x15x12mm | > 20x15x12mm |
| Exposure time | < 15ms | < 33ms | < 33ms |
| Imaging wavelength | 700-900 nm | | |
| Spectral Spread | Power in any 100nm band > 35% of total power | | |
| Scan type | Progressive | | |
| Image margins | Left & right: 0.50x iris diameter, Top & bottom: 0.25x iris diameter | | |
| Pixel depth | > 8 bits/pixel | | |
| Image evaluation frame rate | >= 7 frames/sec, continuous image capture | | |
| Capture mode | Auto capture with built-in quality check (incorporates NIST quality considerations) | | |
| Sensor signal to noise ration | > 36 DB | | |
| Connectivity[5] | USB 2 or higher, USB-IF certified or Networked (TCP/IP) | USB 2 or higher, USB-IF certified | |
| Power | USB or independent PS | | |

| | | | |
|---|---|---|---|
| Weight | NA | < 1 kg | < 1 kg |
| Dimension | <300 x 100 x 300mm | < 220 x 200 x 100 mm | < 220 x 200 x 100 mm |
| Operating temperature | 0-49C | | |
| Humidity | 10 - 90% non-condensing | | |
| Durability/Shock | IP54 | | |
| Safety Standard | Exempt Group per IEC 62471:2006-07 | | |
| Standards | FCC Class A, RoHS | | |
| Liveness | Liveness detection compliance as per IEEE Std 2790™-2020 & ISO/IEC 30107-3 | | |
| Software AP | Compliant with latest UIDAI Device Capture API Specifications. Windows 11 Professional VDM ready certified by UIDAI | | |

[1]Stationary: Any capture process where the device is stationary and the subject is required to position and rest himself/herself
[2]Handheld: Operator operates and holds the camera and the subject is stationary.
[3]Alignment aid: Camera has mechanical fixture for alignment. Optical viewfinder is not considered alignment aid.
[4]Considered simultaneous if second eye is captured within 2 seconds of first eye done without moving the device.
[5]Total of only 1 USB port will be available for connectivity and power

**Item S.2.2 – Camera**

| Specification | Details |
|---|---|
| Standard compliance for image capture | ISO/ IEC 19794-5 |
| Capture Mode | Plain live capture |
| Image Quality | Full Frontal (0x01) as per ISO/IEC 19794-5 |
| Minimum Resolution | 1920x1080 |
| Capture Mode | Manual Capture with Auto Focus and Auto Lighting Adjustment |
| Sensor | >2 Mega Pixel Native |
| Connectivity6 | High Speed USB 2.0 or higher, USB-IF certified |

| | |
|---|---|
| Lens | Fixed, SLR |
| Power | Through USB/Independent PS/Lithium Ion |
| Mount | Tripod/Universal Clip |
| Operating Temperature | 0 to 50 degree Celsius |
| Humidity | 10 – 90% |
| Safety Standard | UL, IS 616:2017 |
| Software API | Compliant with latest UIDAI Device Capture API Specifications |
| Durability / Shock | IP 54 |
| [6]Total of only 1 USB port will be available for connectivity and power | |

**Item S.2.3 – Finger Print Device Specification (Slap Scanner)**

| Specification | Details |
|---|---|
| Standard compliance for image capture | ISO/IEC 19794-4 |
| Capture Mode | Plain live scan capture |
| Image Acquisition Requirements | Setting level 31 or higher (Section 9.1 of Biometric Design Standards for UID Applications V1.0 |
| Image evaluation frame rate | > 3 frames/sec, continuous image capture |
| Capture mode | Auto capture with built-in quality check (incorporates NIST quality considerations) |
| Capture area | >76mm x 80mm |
| Connectivity[7] | USB 2.0 or higher, USB-IF certified |
| Power | Through USB |
| Dimension (W X H X D) | <180MM x 180mm x 180mm |

| | |
|---|---|
| Weight | Maximum 2.5Kg. |
| Operating temperature | 0 – 50 C |
| Humidity | 10 – 90% non-condensing |
| Durability / Shock | IP 54 |
| Standards | UL certified (if applicable). Meets ISO 19794-4:2005 Section7 and Annex A certification requirements (IAFIS Appendix F certified). |
| Software API | Compliant with latest UIDAI Device Capture API Specifications<br><br>Linux/Windows 64 bit VDM ready certified by UIDAI |
| Platen Area Hardness | Hardness Test: 6H compliant Tested as per ASTM D3363;<br>RCA Test: 175g, 400 cycles Abrasion test compliant as per ASTM F 2357-04 |
| Liveness | Liveness detection compliance as per IEEE Std 2790™-2020 & ISO/IEC<br>30107-3 |
| Note:<br>[7]Total of only 1 USB port will be available for connectivity and power | |

**Item S.2.4 – GNSS Device**

| **Specification** | **Details** |
|---|---|
| **Environmental Specifications** | |
| Operating temperature | -40 ~ 85°C |
| Storage temperature | -40 ~ 85°C |
| Humidity | Up to 95% non-condensing |
| Water proof | IP54 or higher |
| **GNSS+NavIC Specification** | |
| GNSS Chipset | SIRF Star III/SIRF Star IV<br>GSD4e /Mediatek/u-blox/sky traq<br>*Must support NavIC constellation |
| Frequency | L1/L5 Dual band |
| Position Accuracy | <5m 3drms |
| Time Accuracy | 15 ns |
| Channels | >=20 channel |
| Acquisition Sensitivity (in – dBm) | -147dBm or better |

| | |
|---|---|
| Tracking Sensitivity (in –dBm) | -165 dBM or better |
| Protocol/Standard support | NMEA 0183 V3.0 protocol, and supports messages: GGA, GSA, GSV, RMC, VTG, GLL,ZDA v2.2 |
| **Position fix time** | |
| Hot Start | 1sec |
| Warm Start | < 30 sec |
| Cold Start | < 60 sec |
| **Position Update Rate** | >= 1Hz |
| **Electrical characteristics** | |
| Voltage | 3.5V ~ 6.5V |
| Current draw | 55-80mA |
| **Other Parameters** | |
| Type of connection and Range | Location and Time/NMEA data transmission to be Wireless with 50 mtrs range/Wired 20 m |
| Ensuring Coordinate Accuracy | The coordinate must be captured with over 99% accuracy |
| | |
| Accessories | With all necessary required cables and accessories to connect to the PC/Laptop |
| Warranty | 3 years Comprehensive on-site Warranty |
| **Note:**<br>**1. GNSS receiver should be capable of receiving location from NavIC constellation**<br>**2. Total of only 1 USB port shall be available for connectivity and power** | |

### Item S.2.5 – Single Finger Print Scanner L1 Registered Device (RD)

| S. No. | **Name/Description** | **Specifications** | **Properties** |
|---|---|---|---|
| 1 | Single Finger Print Scanner Registered Device (L1 Compliant) | Yes | Mandatory |
| 2 | Single Finger Print Scanner Registered Device for Aadhaar Authentication with STQC UIDAI certified RD Service | Yes | Mandatory |
| 3 | STQC Certified (STQC Certificate for the Registered device must be submitted) | Yes | Mandatory |
| 4 | STQC Certificate Number & its validity(L1 compliant) | Yes | Mandatory |

| | | | |
|---|---|---|---|
| 5 | Connector Cable to connect the Device to Micro USB/Type C Port | Yes | Mandatory |
| 6 | Finger Print Device Connectivity | Through Integrated USB 2.0 or higher | Mandatory |
| 7 | Finger Print Device Power | Through USB | Mandatory |
| 8 | Sample application for Android platform to test sensor/extractor | Yes | Mandatory |

Note: (Refer approved **Single Finger Print Scanner Registered Device** devices on UIDAI website)

**Item S.2.6 – Single Iris Scanner Registered Device (RD)**

Note: (Refer approved **Single Iris Print Scanner Registered Device** devices on UIDAI website)

**SPECIAL TERMS AND & CONDITIONS FOR AADHAAR ENROLMENT KIT**

1. Installation & commissioning: Bidder shall provide Remote support Facility for installation of Aadhaar Enrolment Kit
2. Delivery Period: - Bidder shall complete the entire delivery to consignee within 30 days from date of purchase order.
3. Performance bank guarantee – Bidder shall submit the PBG of 10% of the contract value to the purchaser before payment is released
4. Payments: 100 percent of the payment shall be made within 10 days of supply of Aadhaar enrolment kit to consignee after its acceptance & submission of PBG.
5. Warranty for the complete kit except white screen, Focus light & surge protector shall be 3 years.
6. SLA: Incase failing to replace/repair of faulty equipment's within 7 days (equipment's within warranty), Rs100 penalty per day per equipment till the replacement/repair shall be deducted from PBG.

**SPECIFICATION FOR MOBILE & TABLET based on CHILD ENROLMENT LITE CLIENT (CELC)**

| S. No. | Name/Description | Mobile Specifications | Mobile Properties | Tablet Specifications | Tablet Properties |
|---|---|---|---|---|---|
| 1 | Screen | Minimum 5.5" touch screen | Mandatory | Minimum 8" touch screen | Mandatory |
| 2 | Screen Resolution | 1280x720 or higher | Mandatory | 1280x720or higher | Mandatory |
| 3 | Colors Supported | 16 Million | Mandatory | 16 Million | Mandatory |
| 4 | Scratch resistant front screen | Yes. Corning Gorilla Glass 5preferred | Mandatory | Yes | Mandatory |
| 5 | Processor speed minimum | 2 GHz or higher, 64 bit architecture | Mandatory | 2 GHz or higher, 64 bit architecture | Mandatory |
| 6 | RAM | 4GB or Higher | Mandatory | 4GB or Higher | Mandatory |
| 7 | Internal Storage | 64GB or Higher | Mandatory | 64GB or Higher | Mandatory |
| 8 | Expandable Storage through micro SD | 128 GB or higher | Mandatory | 128 GB or higher | Mandatory |
| 9 | GSM SIM card slot | Yes | Mandatory | Yes | Mandatory |
| 10 | Rear Camera with auto focus | 8 M Pixel or higher | Mandatory | 8 M Pixel or higher | Mandatory |

| | | | | | |
|---|---|---|---|---|---|
| 11 | Front Camera | 5 M Pixel or higher | Mandatory | 5 M Pixel or higher | Mandatory |
| 12 | Camera with LED flash | Yes | Mandatory | Yes | Mandatory |
| 13 | Micro USB Port/Type C Port | 1 | Mandatory | 1 | Mandatory |
| 14 | Support for USB OTG | Yes | Mandatory | Yes | Mandatory |
| 15 | Micro USB/Type C host cable | Yes | Mandatory | Yes | Mandatory |
| 16 | Connectivity | Wi-Fi IEEE 802.11 b/g/n/ac | Mandatory | Wi-Fi IEEE 802.11 b/g/n/ac | Mandatory |
| 17 | GPS & AGPS or NavIC facility for capturing the location coordinates | Yes | Mandatory | Yes | Mandatory |
| 18 | Additional Charging port | Yes | Optional | Yes | Optional |
| 19 | Mobile Data Support | Minimum compliance to 4G LTE or above standards | Mandatory | Minimum compliance to 4G LTE or above standards | Mandatory |
| 20 | Battery Capacity | Minimum 5000 mAH | Mandatory | Minimum 5000 mAH | Mandatory |
| 21 | Battery Backup Time | Minimum 8 hours | Mandatory | Minimum 8 hours | Mandatory |

| | | | | | |
|---|---|---|---|---|---|
| 22 | Software Requirements for development support | Android 11.0 or above | Mandatory | Android 11.0 or above | Mandatory |
| 23 | SAR Value | Within acceptable limits permitted in India | Mandatory | Within acceptable limits permitted in India | Mandatory |
| 24 | Certifications Available | BIS, or any other relevant Indian Certificates | Mandatory | BIS, or any other relevant Indian Certificates | Mandatory |
| 25 | Certifications Available | UL | Optional | UL | Optional |
| 26 | BIS Registration under CRS of Meity | Yes | Mandatory | Yes | Mandatory |

**Single Finger Print Scanner Registered Device (RD)**

| II. Group | Name/Description | Specifications | Properties |
|---|---|---|---|
| 1 | Single Finger Print Scanner Registered Device (L1 Compliant) | Yes | Mandatory |
| 2 | Single Finger Print Scanner Registered Device for Aadhaar Authentication with STQC UIDAI certified RD Service | Yes | Mandatory |
| 3 | STQC Certified (STQC Certificate for the Registered device must be submitted) | Yes | Mandatory |
| 4 | STQC Certificate Number & its validity(L1 compliant) | Yes | Mandatory |
| 5 | Connector Cable to connect the Device to Micro USB/Type C Port | Yes | Mandatory |
| 6 | Finger Print Device Connectivity | Through Integrated USB 2.0 or higher | Mandatory |
| 7 | Finger Print Device Power | Through USB | Mandatory |
| 8 | Sample application for Android platform to test sensor/extractor | Yes | Mandatory |
| Note: (Refer approved **Single Finger Print Scanner Registered Device** on URL https://uidai.gov.in/images/resource/L1_RD_Devices.pdf | | | |

**Single Iris Scanner RD device**

Note: (Refer approved **Single Iris Scanner RD devices** on URL

https://uidai.gov.in/images/resource/List_of_UIDAI_certified_Iris_device_vendors_01_04_2023.pdf)

## 8.25 ANNEXURE-XXV - MASTER SERVICE AGREEMENT

THIS MASTER SERVICE AGREEMENT (MSA) is entered into as of _____ day of Year _____between, Unique Identification Authority of India (hereinafter referred to as "**the Purchaser**") which expression shall unless repugnant to the context or meaning thereof mean and be deemed to include its authorized representatives and permitted assigns of the FIRST PART and ____ having its Office at ____ (hereinafter referred to as "**the Service Provider**") which expression shall unless excluded by or repugnant to the context, includes their Heirs, Executors, Administrators and Legal Representatives of the SECOND PART.

**WHEREAS Purchaser** is desirous of entering into a contract for _____with the Service Provider and has accepted to pay to the Service Provider the contract amount for provisioning of those Services where Aadhaar enrolment/update is successful as per the unit rate …… for enrolment and ……. for update as agreed upon in this Contract.

**AND WHEREAS** the Service Provider has agreed to provide Services as listed in Bid Document No_____, as per the rate(s) given in the table below mentioned hereinafter.

**NOW THIS AGREEMENT WITNESSETH AS FOLLOWS:**

1. In this Agreement words and expressions shall have the same meanings as are respectively assigned to them in the Conditions of Contract referred to.
2. The following documents shall be deemed to form and be read and construed as part of this Agreement viz:

    a. Bid Document No_____ regarding _____ including:

| Sr. No. | Subject |
|---|---|
| 1 | Invitation to Bid |
| 2 | Instruction to Bidders |
| 3 | Bid criteria and evaluation |
| 4 | Scope of Work |
| 5 | General Conditions of Contract (GCC) |
| 6 | Liquidity Damage, SLA and Payment Terms |
| 7 | Change Request and Exit management plan |
| 8 | Annexures |

b. Notice of Award (NoA) No._____ dated _____ placed on the Consultant.

3. In consideration of the payments to be made by the Purchaser to the Service Provider as hereinafter mentioned, the Service Provider hereby covenants with the Purchaser to provide the services and to remedy therein in conformity in all aspects with the provisions of the aforesaid Bid under reference.
4. The Purchaser hereby agreed to pay the Service Provider in consideration of the provision of the Services as listed below and the remedying of defects therein, the Contract value or such other sum as may become payable under the provisions of the Contract at the times and in the manner prescribed by the Contract.

   a. On the basis of "Discovered Rate" Service Provider will be paid 125% of the Discovered Rate for each new Enrolment (above 5 years of age), Biometric Update (with or without demographic update) transaction and

   b. 75% of the Discovered Rate for each child enrolment (below 5 years), Demographic Update and Document only update transaction for carrying out/delivery of services as enumerated in Section- 4.

| | Col-A | Col-B | Col-C | Col-D | Col-E | Col-F=A*B*C*D*E | Col-G | Col-H=F+G |
|---|---|---|---|---|---|---|---|---|
| **Pricing calculation for quotation on GeM** | | | | | | | | |
| **Sl.no** | **Discovered Rate (agreed in Contract) in ₹.** | **Per day per Kit Average transactions** | **Total Number of Kits** | **Number of days in a month** | **Number of months** | **Value in ₹** | **GST @18%** | **Final contract value in ₹** |
| | | **48** | | **30** | **72** | | | |

TOTAL CONTRACT VALUE: …..... (Rupees ……)

**IN WITNESS** whereof the parties hereto have caused this Agreement to be executed in accordance with their respective laws the day and year first above written.

**Signed, sealed and delivered for and on behalf of the CEO, Unique Identification Authority of India**

**M/s** _____

Signature ----------
Name ----------
Designation _____
Address ----------
Date ----------

Place : New Delhi

Signature ----------
Name ----------
Designation _____
Address ----------
Date ----------

Place New Delhi

**In the presence of:**

Signature ----------
Name ----------
Designation _____
Date ----------

Place : New Delhi

**In the presence of:**

Signature ----------
Name ----------
Designation _____
Date ----------

Place New Delhi